# IIS211

## Inductive sensor

IIK3022-BPKG/M/US-104-DPS

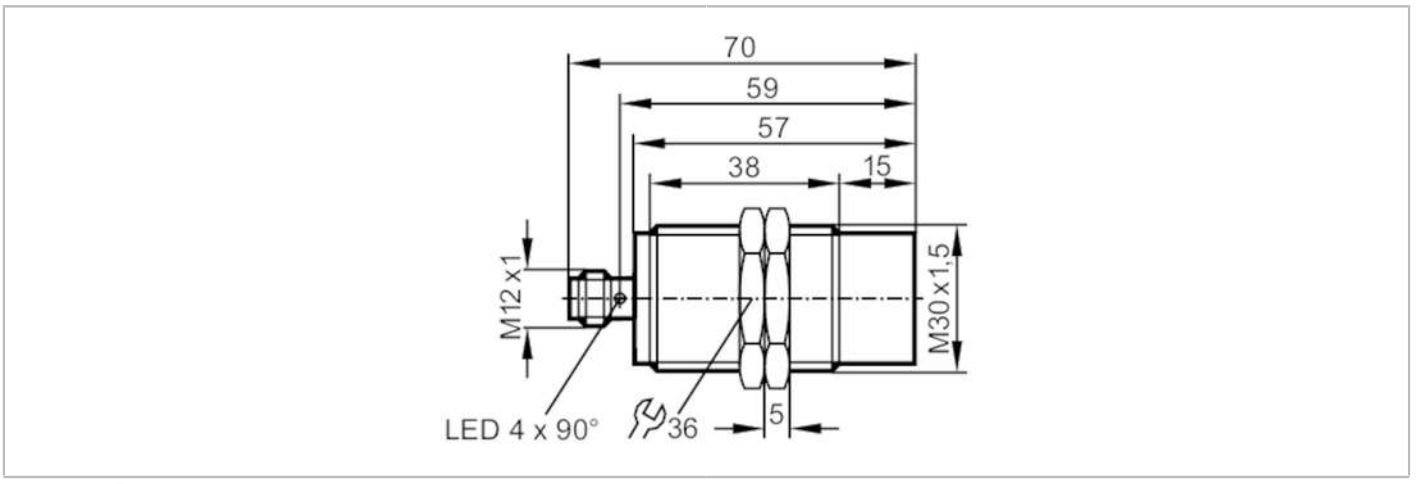


| | | |
|---|---|---|
| **Product characteristics** | | |
| Electrical design | | PNP |
| Output function | | normally open |
| Sensing range | [mm] | 22 |
| Housing | | threaded type |
| Dimensions | [mm] | M30 x 1.5 / L = 70 |
| **Application** | | |
| Special feature | | Gold-plated contacts; Increased sensing range |
| Application | | Industrial applications / factory automation |
| **Electrical data** | | |
| Operating voltage | [V] | 10...36 DC |
| Current consumption | [mA] | < 10 |
| Protection class | | II |
| Reverse polarity protection | | yes |
| **Outputs** | | |
| Electrical design | | PNP |
| Output function | | normally open |
| Max. voltage drop switching output DC | [V] | 2.5 |
| Permanent current rating of switching output DC | [mA] | 100 |
| Switching frequency DC | [Hz] | 100 |
| Short-circuit protection | | yes |
| Type of short-circuit protection | | pulsed |
| Overload protection | | yes |
| **Detection zone** | | |
| Sensing range | [mm] | 22 |
| Real sensing range Sr | [mm] | 22 ± 10 % |
| Operating distance | [mm] | 0...17.6 |

# IIS211

## Inductive sensor

IIK3022-BPKG/M/US-104-DPS

| | | | |
|---|---|---|---|
| Increased sensing range | | yes | |
| **Accuracy / deviations** | | | |
| Correction factor | | steel: 1 / stainless steel: 0.7 / brass: 0.5 / aluminium: 0.5 / copper: 0.4 | |
| Hysteresis | [% of Sr] | 1...20 | |
| Switch point drift | [% of Sr] | -10...10 | |
| **Operating conditions** | | | |
| Ambient temperature | [°C] | -25...70 | |
| Protection | | IP 67 | |
| **Tests / approvals** | | | |
| EMC | | EN 61000-4-2 ESD | 4 kV CD / 8 kV AD |
| | | EN 61000-4-3 HF radiated | 10 V/m |
| | | EN 61000-4-4 Burst | 2 kV |
| | | EN 61000-4-5 Surge | 0,5 kV |
| | | EN 61000-4-6 HF conducted | 10 V |
| | | EN 55011 | class B |
| MTTF | [years] | 1594 | |
| UL approval | | Ta | 0...40 °C |
| | | Enclosure type | Type 1 |
| | | power supply | Limited Voltage/Current |
| | | File number UL | E174191 |
| **Mechanical data** | | | |
| Weight | [g] | 117.9 | |
| Housing | | threaded type | |
| Mounting | | non-flush mountable | |
| Dimensions | [mm] | M30 x 1.5 / L = 70 | |
| Thread designation | | M30 x 1.5 | |
| Materials | | stainless steel (1.4404 / 316L); sensing face: PBT orange | |
| **Displays / operating elements** | | | |
| Display | | switching status | 4 x 90° LED, yellow |
| **Accessories** | | | |
| Items supplied | | lock nuts: 2 | |
| **Remarks** | | | |
| Pack quantity | | 1 pcs. | |

**Electrical connection - plug**

Connector: 1 x M12; coding: A; Contacts: gold-plated

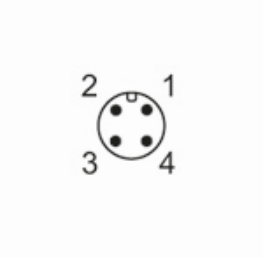

# IIS211

## Inductive sensor

**IIK3022-BPKG/M/US-104-DPS**

## Connection

