Chrome DIN Rail Power Supply

24V 30W 1 Phase (Class II & NEC Class 2) / DRC-24V30W1A☐



*This picture is for reference to DRC-24V30W series only.

CHROME

Highlights & Features

- Class II, Double Isolation (No Earth connection is required)
- Universal AC input voltage range and full power up to 55°C
- Power will not de-rate for the entire input voltage range
- Efficiency > 87.0% @ 115Vac & 230Vac
- Can be installed in compact cabinets
- NEC Class 2 and Limited Power Source (LPS) approvals
- Conforms to harmonic current IEC/EN 61000-3-2, Class A
- Safety approval according to IEC/EN/UL 60950-1, IEC/EN/UL 62368-1 and UL508

Safety Standards

CB Certified for worldwide use

Model Number: DRC-24V30W1A☐
Unit Weight: 0.14 kg (0.31 lb)
Dimensions (L x W x D): 91 x 53 x 55.6 mm (3.58 x 2.09 x 2.19 inch)

General Description

The DRC-24V30W1A☐ is part of the Chrome DIN rail power supply series, which is designed for use in compact cabinets for home automations and the food and beverage industry. Delta's Chrome DIN rail power supply series offers double isolated input. This means that no Earth connection is required thus resulting in low leakage current. This product provides a universal input voltage range of 90-264Vac, and a wide temperature range of -25°C to 71°C. The Chrome series is certified to safety standard according to IEC/EN/UL 60950-1, IEC/EN/UL 62368-1 and UL 508. NEC Class 2 and Limited Power Source (LPS) approvals are available for this product.

Model Information

Chrome DIN Rail Power Supply

Model Number	Input Voltage Range	Rated Output Voltage	Rated Output Current
DRC-24V30W1A☐	90-264Vac (125-375Vdc)	24Vdc	1.25A

Model Numbering

DR	C –	24V	30W	1	A	☐
DIN Rail	Product Series C – Isolation Class II Power Supply	Output Voltage	Output Power (30W series)	Single Phase	No PFC	Z – Black Plastic Case G – Grey Plastic Case

Chrome DIN Rail Power Supply

24V 30W 1 Phase (Class II & NEC Class 2) / DRC-24V30W1A□

Specifications

Input Ratings / Characteristics

Nominal Input Voltage		100-240Vac
Input Voltage Range		90-264Vac
Nominal Input Frequency		50-60Hz
Input Frequency Range		47-63Hz
Nominal DC Input Voltage*		125-375Vdc
Input Current		< 0.80A @ 115Vac, < 0.60A @ 230Vac
Efficiency at 100% Load		> 87.0% @ 115Vac & 230Vac
Max Power Dissipation	0% load	< 0.3W @ 115Vac & 230Vac
	100% load	< 4.48W @ 115Vac & 230Vac
Max Inrush Current (Cold Start)		< 25A @ 115Vac, < 50A @ 230Vac
Leakage Current		< 0.25mA @ 240Vac

* Fulfills test conditions for DC input. Safety approval for DC input can be obtained upon request.

Output Ratings / Characteristics**

Nominal Output Voltage	24Vdc
Factory Set Point Tolerance	24Vdc ± 2%
Output Voltage Adjustment Range	23.52-24.48Vdc
Output Current	0-1.25A (30W max.)
Output Power	30W
Line Regulation	< 0.5% (@ 90-264Vac input, 100% load)
Load Regulation	< 1.0% (@ 90-264Vac input, 0-100% load)
PARD*** (20MHz)	< 100mVpp
Rise Time	< 70ms @ nominal input (100% load)
Start-up Time	< 2,000ms @ nominal input (100% load)
Hold-up Time	> 25ms @ 115Vac, > 60ms @ 230Vac (100% load)
Dynamic Response (Overshoot & Undershoot O/P Voltage)	± 5% @ 90-264Vac input, 10-100% load (Slew Rate: 0.1A/μs, 50% duty cycle @ 5Hz to 100Hz)
Start-up with Capacitive Loads	3,000μF Max

**For power de-rating from 55°C to 71°C, see power de-rating on page 3.
***PARD is measured with an AC coupling mode, 5cm wires, and in parallel with 0.1μF ceramic capacitor & 47μF electrolytic capacitor.

Chrome DIN Rail Power Supply

24V 30W 1 Phase (Class II & NEC Class 2) / DRC-24V30W1A□

Mechanical

Case Cover		Plastic
Dimensions (L x W x D)		91 x 53 x 55.6 mm (3.58 x 2.09 x 2.19 inch)
Unit Weight		0.14 kg (0.31 lb)
Indicator	Green LED	DC OK
Cooling System		Convection
Terminal	Input	2 Pins (Rated 300V/25A)
	Output	4 Pins (Rated 300V/25A)
Wire	Input / Output	AWG 24-12
Mounting Rail		Standard TS35 DIN Rail in accordance with EN 60715
Noise (1 Meter from power supply)		Sound Pressure Level (SPL) < 25dBA

Environment

Surrounding Air Temperature	Operating	-25°C to +71°C
	Storage	-25°C to +85°C
Power De-rating		> 55°C de-rate power by 2.5% / °C
Operating Humidity		5 to 95% RH (Non-Condensing)
Operating Altitude		0 to 2,000 Meters (6,560 ft)
Shock Test	Operating	IEC 60068-2-27, Half Sine Wave: 4G for a duration of 22ms, 3 shocks for each 3 directions, 9 times in total
Vibration	Operating	IEC 60068-2-6, Sine Wave: 10-500Hz @ 19.6m/S² (2G peak); 10 min per cycle, 60 min for all X, Y, Z directions
Over Voltage Category		II
Pollution Degree		2

Protections

Overvoltage	< 34.8V, SELV Output, Latch Mode
Overload / Overcurrent	> 130% of rated load current, Hiccup Mode, Non-Latching (Auto-Recovery)
Over Temperature	> 75°C Surrounding Air Temperature @ 100% load, Latch Mode
Short Circuit	Hiccup Mode, Non-Latching (Auto-Recovery when the fault is removed)
Internal Fuse at L pin	T3.15AH
Degree of Protection	IP20
Protection Against Shock	Class II (No PE* connection is required)

*PE: Primary Earth

Reliability Data

MTBF	> 500,000 hrs. as per Telcordia SR-332 I/P: 100Vac, O/P: 100% load, Ta: 35°C
Expected Cap Life Time	10 years (115Vac & 230Vac, 50% load @ 40°C)

Chrome DIN Rail Power Supply

24V 30W 1 Phase (Class II & NEC Class 2) / DRC-24V30W1A□

Safety Standards / Directives

Safety Entry Low Voltage		SELV (EN 60950)
Electrical Safety	TUV Bauart	EN 60950-1, EN 62368-1
	UL/cUL recognized	UL 60950-1 and CSA C22.2 No. 60950-1 (File No. E131881) UL 62368-1 and CSA C22.2 No. 62368-1 (File No. E131881)
	CB scheme	IEC 60950-1, IEC 62368-1, Limited Power Source (LPS)
Industrial Control Equipment	UL/cUL listed	UL 508 and CSA C22.2 No. 107.1-01 (File No. E338991)
Class 2 Power Supply	UL/cUL recognized	UL 60950-1 and CSA C22.2 No. 60950-1 (File No. E131881) UL 62368-1 and CSA C22.2 No. 62368-1 (File No. E131881)
CE		In conformance with EMC Directive 2014/30/EU and Low Voltage Directive 2014/35/EU
UKCA		In conformance with 2016 No. 1101. The Electrical Equipment (Safety) Regulations 2016 and 2016 No. 1091 The Electromagnetic Compatibility Regulations 2016
Galvanic Isolation	Input to Output	3.0KVac

EMC

Emissions (CE & RE)		Generic Standards: CISPR 32, EN 55032, FCC Title 47: Class B
Immunity		Generic Standards: EN 55024
Electrostatic Discharge	IEC 61000-4-2	Level 3 Criteria A[1)] Air Discharge: 8kV Contact Discharge: 4kV
Radiated Field	IEC 61000-4-3	Level 2 Criteria A[1)] 80MHz-1GHz, 3V/M with 1kHz tone / 80% modulation
Electrical Fast Transient / Burst	IEC 61000-4-4	Level 3 Criteria A[1)] 1kV
Surge	IEC 61000-4-5	Level 3 Criteria A[1)] Common Mode[2)]: 2kV Differential Mode[3)]: 1kV
Conducted	IEC 61000-4-6	Level 2 Criteria A[1)] 150kHz-80MHz, 3Vrms
Power Frequency Magnetic Fields	IEC 61000-4-8	Criteria A[1)] 1A/Meter
Voltage Dips and Interruptions	IEC 61000-4-11	> 95% dip; 0.5 cycle (10ms); Self Recoverable
Harmonic Current Emission		IEC/EN 61000-3-2, Class A
Voltage Fluctuation and Flicker		IEC/EN 61000-3-3

1) Criteria A: Normal performance within the specification limits
2) Asymmetrical: Common mode (Line to earth)
3) Symmetrical: Differential mode (Line to line)

Chrome DIN Rail Power Supply

24V 30W 1 Phase (Class II & NEC Class 2) / DRC-24V30W1A□

Block Diagram

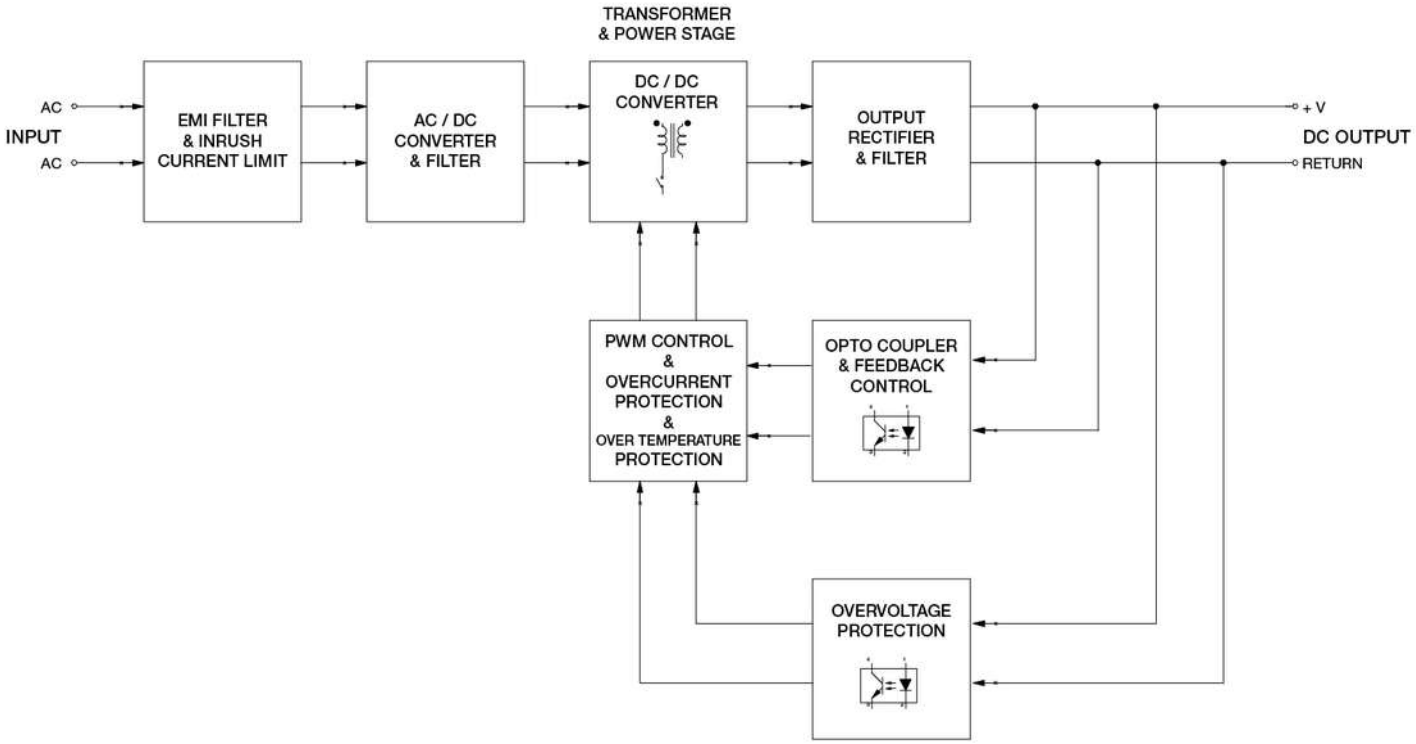

Device Description

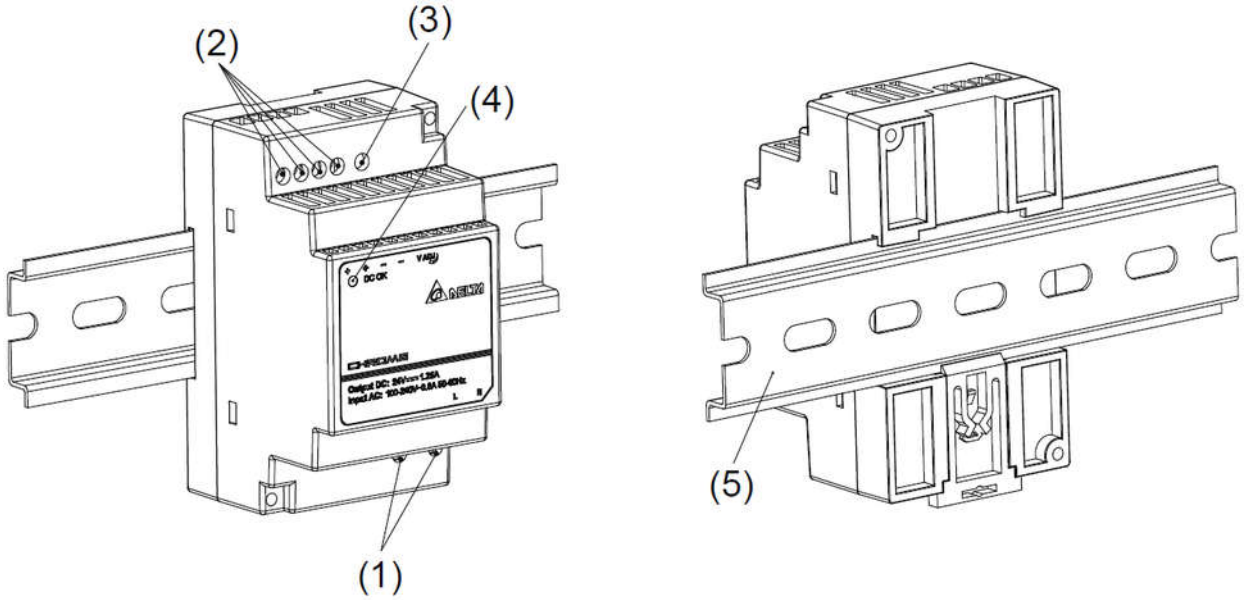

1) Input terminal block connector
2) Output terminal block connector
3) DC voltage adjustment potentiometer
4) DC OK control LED (Green)
5) Universal mounting system

All parameters are specified at 25°C ambient and AC input unless otherwise indicated.

Chrome DIN Rail Power Supply

24V 30W 1 Phase (Class II & NEC Class 2) / DRC-24V30W1A□

Dimensions

L x W x D: 91 x 53 x 55.6 mm (3.58 x 2.09 x 2.19 inch)

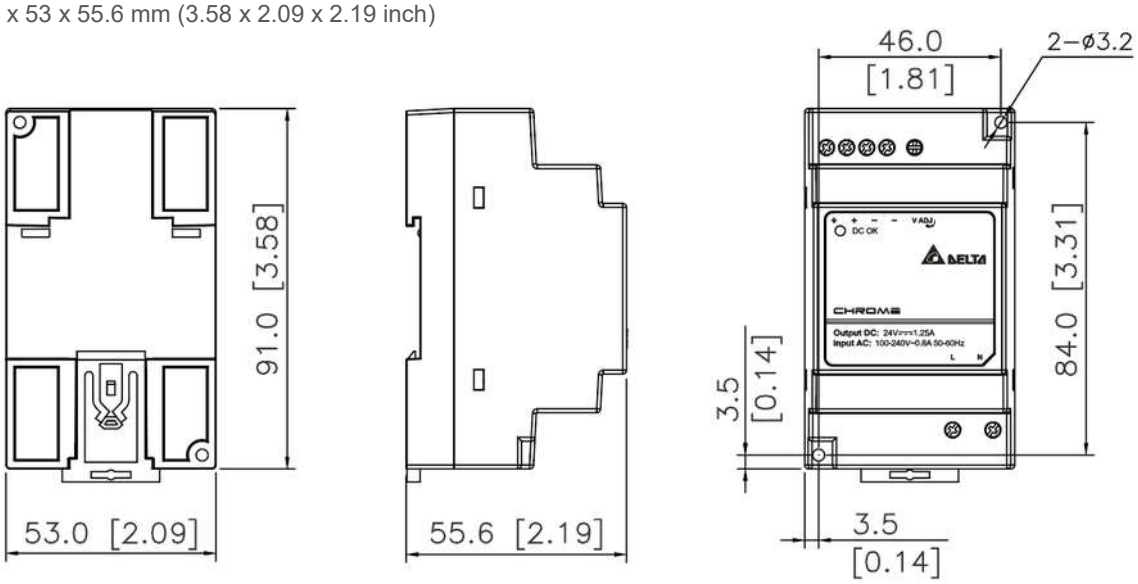

Engineering Data

Output Load De-rating VS Surrounding Air Temperature

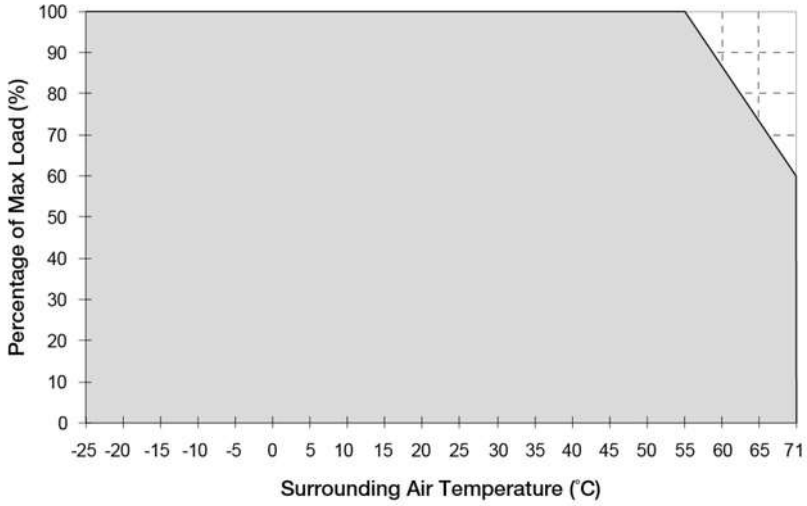

Fig. 1 De-rating for Vertical Mounting Orientation
> 55°C de-rate power by 2.5% / °C

Note

1. Power supply components may degrade, or be damaged, when the power supply is continuously used outside the shaded region, refer to the graph shown in Fig. 1.
2. If the output capacity is not reduced when the surrounding air temperature exceeds its specification as defined on Page 3 under “Environment”, the device may run into Over Temperature Protection. When activated, the output voltage will go into latch mode and recover when AC power recycles.
3. In order for the device to function in the manner intended, it is also necessary to keep a safety distance as recommended in the safety instructions while the device is in operation.
4. Depending on the surrounding air temperature and output load delivered by the power supply, the device can be very hot!
5. If the device has to be mounted in any other orientation, please contact **info@deltapsu.com** for more details.

Chrome DIN Rail Power Supply

24V 30W 1 Phase (Class II & NEC Class 2) / DRC-24V30W1A□

Output Load De-rating VS Input Voltage

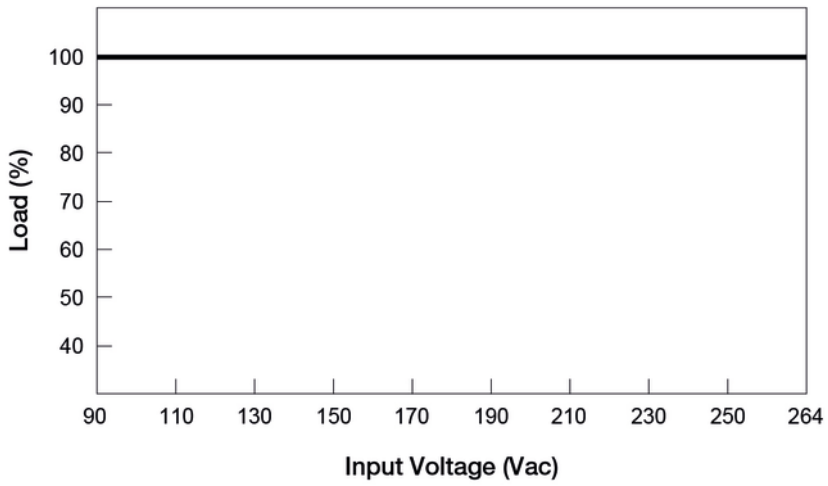

- No output power de-rating across the entire input voltage range

Assembly & Installation

The power supply unit (PSU) can be mounted on 35 mm DIN rails in accordance with EN60715. The device should be installed with input terminal block at the bottom.

Each device is delivered ready to install.

Mounting

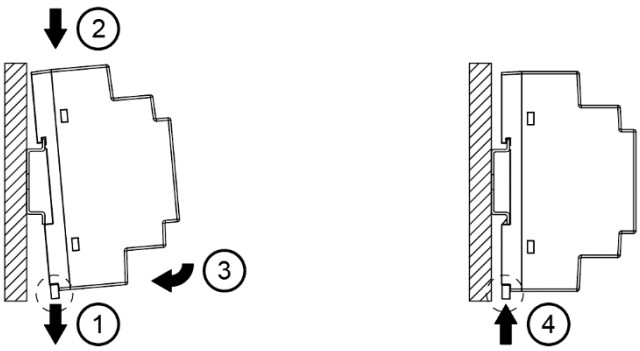

Fig. 2.1 Mounting

Snap on the DIN rail as shown in Fig. 2.1:

1. Pull the unit's DIN rail latch OUT.
2. Tilt the unit slightly upwards, hook the top end onto the DIN rail and push downwards until stopped.
3. Position the bottom front end against the DIN rail.
4. Push the unit's latch DIN rail IN to lock.

Dismounting

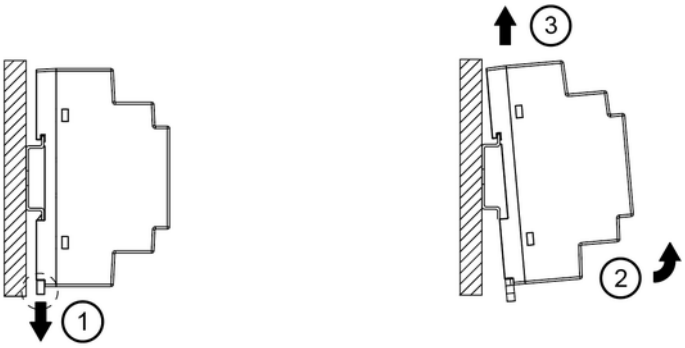

Fig. 2.2 Dismounting

To uninstall, pull the unit's DIN rail latch OUT as shown in Fig. 2.2. Tilt the bottom part of the unit out. Push the unit up and pull out from the DIN rail.

Chrome DIN Rail Power Supply

24V 30W 1 Phase (Class II & NEC Class 2) / DRC-24V30W1A□

Safety Instructions

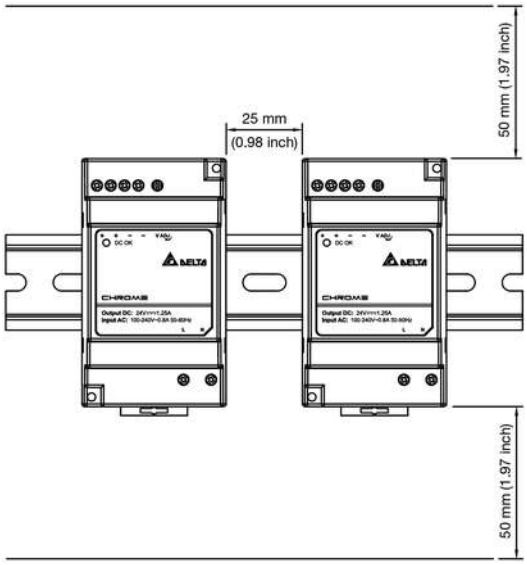

- ALWAYS switch mains of input power OFF before connecting and disconnecting the input voltage to the unit. If mains are not turned OFF, there is risk of explosion / severe damage.
- **To guarantee sufficient convection cooling, keep a distance of 50 mm (1.97 inch) above and below the device as well as a lateral distance of 25 mm (0.98 inch) to other units.**
- Note that the enclosure of the device can become very hot depending on the surrounding air temperature and load of the power supply. Risk of burns!
- DO NOT insert any objects into the unit.
- Hazardous voltages may be present for up to 5 minutes after the input mains voltage is disconnected. Do not touch the unit during this time.
- The power supplies are built in units and must be installed in a cabinet or room (condensation free environment and indoor location) that is relatively free of conductive contaminants.

Functions

■ **Graph illustrating the Start-up Time, Rise Time, and Hold-up Time**

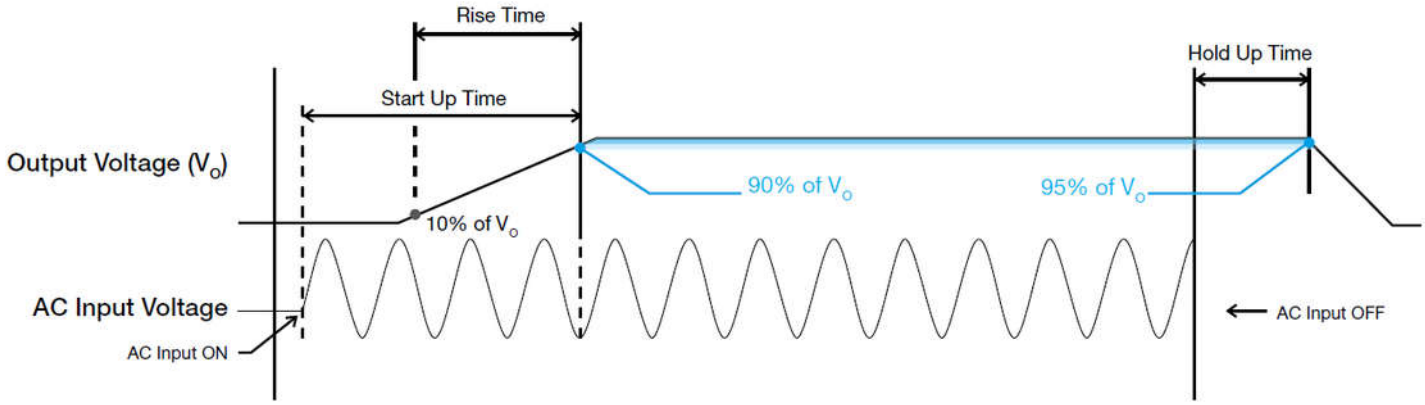

Start-up Time

The time required for the output voltage to reach 90% of its final steady state set value, after the input voltage is applied.

Rise Time

The time required for the output voltage to change from 10% to 90% of its final steady state set value.

Hold-up Time

Time between the collapse of the AC input voltage, and the output falling to 95% of its steady state set value.

Chrome DIN Rail Power Supply

24V 30W 1 Phase (Class II & NEC Class 2) / DRC-24V30W1A□

Inrush Current

Inrush current is the peak, instantaneous, input current measured and, occurs when the input voltage is first applied. For AC input voltages, the maximum peak value of inrush current will occur during the first half cycle of the applied AC voltage. This peak value decreases exponentially during subsequent cycles of AC voltage.

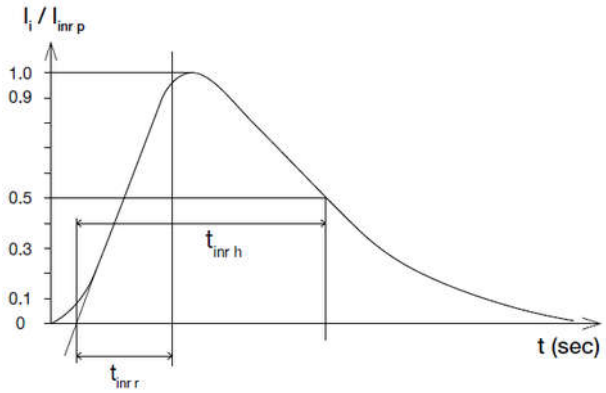

Dynamic Response

The power supply output voltage will remains within ±5% of its steady state value, when subjected to a dynamic load from 10 to 100% of its rated current.

- **50% duty cycle / 5Hz to 100Hz**

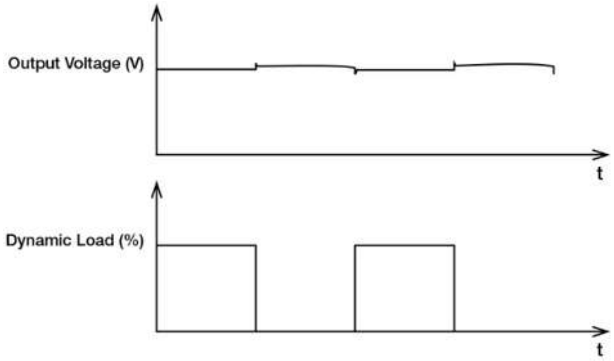

External Input Protection Device

The unit is protected with internal fuse (not replaceable) at L pin and it has been tested and approved on 20A (UL) and 16A (IEC) branch circuits without additional protection device. An external protection device is only required if the supplying branch has an ampacity greater than above. Thus, if an external protective device is necessary, or, utilized, a minimum value of 13A B- or 8A C- characteristic breaker should be used.

Chrome DIN Rail Power Supply

24V 30W 1 Phase (Class II & NEC Class 2) / DRC-24V30W1A□

Overload & Overcurrent Protections (Auto-Recovery)

The power supply's Overload (OLP) and Over current (OCP) Protections will be activated when output current (I_O) exceeds its specification as defined on Page 3 under "Protections". In such occurrence, once the power supply has reached its maximum power limit, the protection is activated and the power supply will go into "Hiccup mode" (Auto-Recovery). The power supply will recover once the fault condition of the OLP and OCP is removed and I_O is back within the specifications.

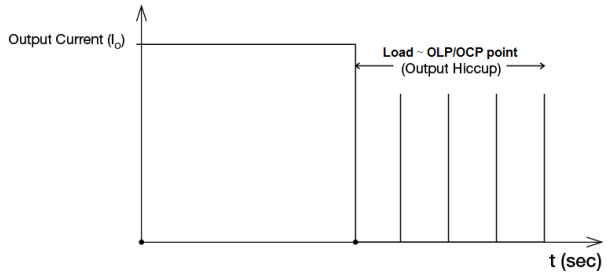

It is not recommended to prolong the duration of I_O when it is less than OLP/OCP point, but greater than 100%, since it may cause damage to the PSU.

Short Circuit Protection (Auto-Recovery)

The power supply's output OLP/OCP function also provides protection against short circuits. When a short circuit is applied, the output current will operate in "Hiccup mode", as shown in the illustration in the OLP/OCP section on this page. The power supply will return to normal operation after the short circuit is removed.

Overvoltage Protection (Latch Mode)

The power supply's overvoltage circuit will be activated when its internal feedback circuit fails. The output voltage shall not exceed its specifications defined on Page 3 under "Protections". Power supply will latch, and require removal/re-application of input AC voltage in order to restart.

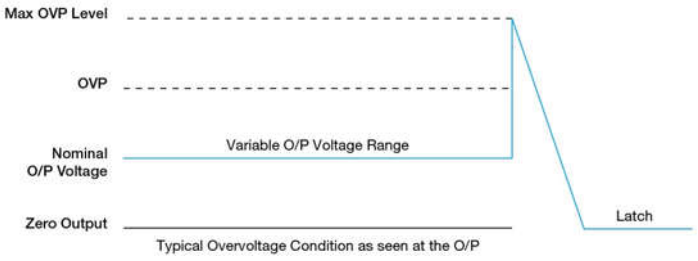

Over Temperature Protection (Latch Mode)

As described in load de-rating section, the power supply also has Over Temperature Protection (OTP). In the event of a higher operating temperature at 100% load; or, when the operating temperature is beyond what is recommended in the de-rating graph, the OTP circuit will be activated. When activated, power supply will latch, until the surrounding air temperature drops to its normal operating temperature or the load is reduced as recommended in the de-rating graph. Removal/re-application of input AC voltage will then be required in order to restart.

Chrome DIN Rail Power Supply

24V 30W 1 Phase (Class II & NEC Class 2) / DRC-24V30W1A□

Operating Mode

■ **Redundant Operation**

In order to ensure proper redundancy operation for the power supply unit (PSU), ensure that the output voltage difference between the two units is kept at 0.45~0.50V for 24V supplies. Follow simple steps given below to verify:

Step 1.
Measure output voltage of PSU 1 and PSU 2. If PSU 1 is the master unit, then V_O of PSU 1 must be higher than PSU 2. In order to set the output voltage, connect the power supply to 50% load at any line voltage, and set the PSU 1 and PSU 2 output voltage.

Step 2.
Connect the power supply units PSU 1 and PSU 2 to V_{in} 1 & V_{in} 2, respectively, of the DRR-20N (or 20A) module shown on the right of above diagram.

Step 3.
Connect the system load from V_{out}. Please note that output voltage V_{out} from DRR module will be = V_O (output voltage of power supply) – V_{drop}* (in DRR module).

*Vdrop will vary from 0.60V to 0.90V (Typical 0.65V) depending on the load current and surrounding air temperature.

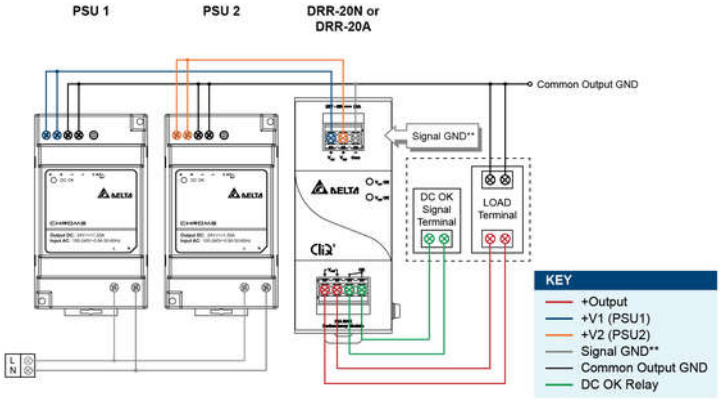

**The Signal GND in the DRR module is for the built-in LED and DC OK signals. The Output GND terminals from the two PSU's do not need to be connected to the Signal GND terminal.

Fig. 3 Redundant Operation Connection Diagram

■ **Parallel Operation**

The power supply units (PSUs) can also be used for parallel operation in order to increase the output power. The difference in output voltage between the two units must be kept to within 25mV of each other. This difference must be verified with the same output load connected independently to each unit.

Parameters such as EMI, inrush current, leakage current, PARD, start up time will be different from those on the datasheet, when two units are connected in parallel. The user will need to verify that any differences will still allow the two power supplies connected in parallel will work properly in their product/application.

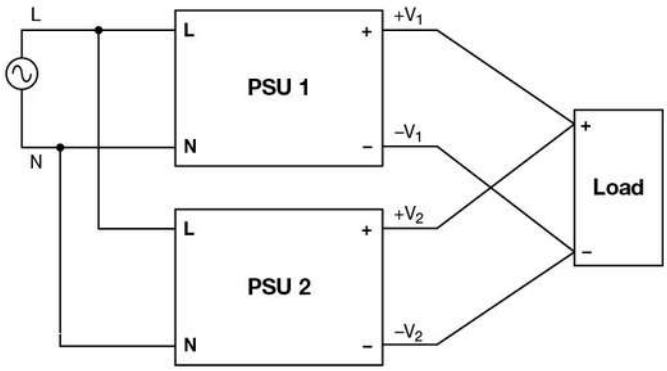

Fig. 4 Parallel Operation Connection Diagram

All parameters are specified at 25°C ambient and AC input unless otherwise indicated.
www.DeltaPSU.com (April 2021, Rev. 05)

Chrome DIN Rail Power Supply

24V 30W 1 Phase (Class II & NEC Class 2) / DRC-24V30W1A□

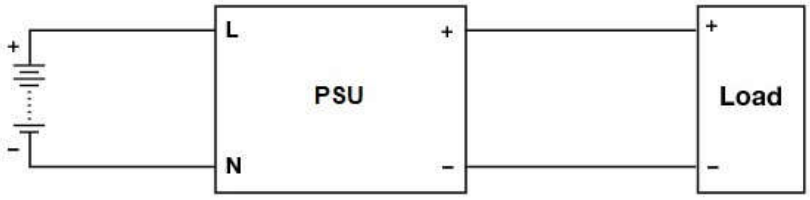

Fig. 5 DC Input Operation Connection Diagram

■ DC Input Operation

Step 1.
Use a battery or similar DC source.

Step 2.
Connect +pole to L and -pole to N.

Step 3.
Connect the PE terminal to an earth wire or to the machine ground.

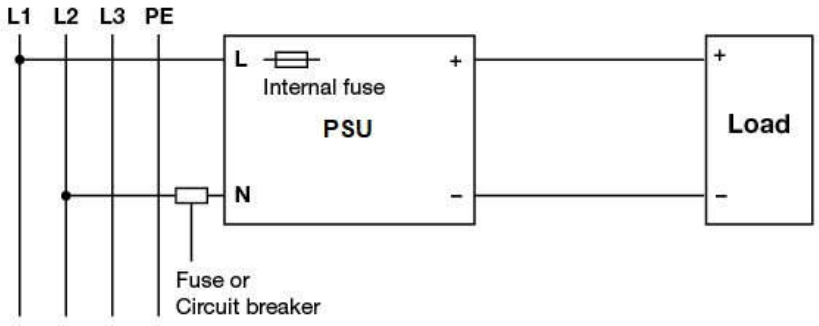

Fig. 6 2 of 3 Phase System Input Operation Connection Diagram

■ 2 of 3 Phase System Input Operation

Delta's Chrome can use on 2 of 3 phase system. Please refer to the following step.

Step 1.
The input voltage applied from Line to Neutral is below the maximum rated input. The input voltage shall be below 240Vac +10%.

Step 2.
The external protector is needed on N (Neutral) input line to secure a safety. N line does not have internal fuse protection. An appropriate fuse or circuit breaker should be connected in series with N input line connection like the following.

Chrome DIN Rail Power Supply

24V 30W 1 Phase (Class II & NEC Class 2) / DRC-24V30W1A□

Others

PFC – Norm EN 61000-3-2

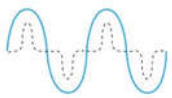

Line Current Harmonic content

Typically, the input current waveform is not sinusoidal due to the periodical peak charging of the input capacitor. In industrial environment, complying with EN 61000-3-2 is only necessary under special conditions. Complying to this standard can have some technical drawbacks, such as lower efficiency as well as some commercial aspects such as higher purchasing costs. Frequently, the user does not profit from fulfilling this standard, therefore, it is important to know whether it is mandatory to meet this standard for a specific application.

Attention

Delta provides all information in the datasheets on an “AS IS” basis and does not offer any kind of warranty through the information for using the product. In the event of any discrepancy between the information in the catalog and datasheets, the datasheets shall prevail (please refer to **www.DeltaPSU.com** for the latest datasheets information). Delta shall have no liability of indemnification for any claim or action arising from any error for the provided information in the datasheets. Customer shall take its responsibility for evaluation of using the product before placing an order with Delta.

Delta reserves the right to make changes to the information described in the datasheets without notice.

Manufacturer and Authorized Representatives Information

Manufacturer

Thailand
Delta Electronics (Thailand) PCL.
909 Pattana 1 Rd., Muang, Samutprakarn, 10280 Thailand

Taiwan
Delta Electronics, Inc.
3 Tungyuan Road, Chungli Industrial Zone, Taoyuan County 32063, Taiwan

Authorized Representatives

The Netherlands
Delta Greentech (Netherlands) B.V.
Zandsteen 15, 2132 MZ Hoofddorp, The Netherlands

United Kingdom
Delta Electronics Europe Limited
1 Redwood Court, Peel Park Campus,
East Kilbride, Glasgow, G74 5PF, United Kingdom