D6T

MEMS Thermal Sensors

High Sensitivity Enables Detection of Stationary Human Presence

- **OMRON's unique MEMS and ASIC technology achieve a high SNR.**
- **Superior noise immunity with a digital output.**
- **High-precision area temperature detection with low cross-talk field of view characteristics.**



Refer to *Safety Precautions* on page 4.

Ordering Information

Element type	Model
4×4	**D6T-44L-06**
1×8	**D6T-8L-06**

Ratings, Specifications, and Functions

Ratings

Item	Specification
Power supply voltage	4.5 to 5.5 VDC
Storage temperature range	−10 to 60°C (with no icing or condensation)
Operating temperature range	0 to 50°C (with no icing or condensation)
Storage humidity range	85% max. (with no icing or condensation)
Operating humidity range	20% to 85% (with no icing or condensation)

Characteristics

Item		D6T-44L-06	D6T-8L-06
View angle *1	X direction	44.2°	62.8°
	Y direction	45.7°	6.0°
Object temperature output accuracy *2	Accuracy 1	±1.5°C max. Measurement conditions: Vcc = 5.0 V (1) Tx = 25°C, Ta = 25°C (2) Tx = 45°C, Ta = 25°C (3) Tx = 45°C, Ta = 45°C	
	Accuracy 2	±3.0°C max. Measurement conditions: Vcc = 5.0 V (4) Tx = 25°C, Ta = 45°C	
Current consumption		5 mA typical	

Functions

Item	Specification
Object temperature detection range *2	5 to 50°C
Reference temperature detection range *2	5 to 45°C
Output specifications	Digital values that correspond to the object temperature (Tx) and reference temperature (Ta) are output from a serial communications port.
Output form	Binary code (10 times the detected temperature (°C))
Communications form	I2C compliant
Temperature resolution (NETD)	0.14°C

*1. Refer to *Field of View Characteristics*.
*2. Refer to *Object Temperature Detection Range*.

Object Temperature Detection Range

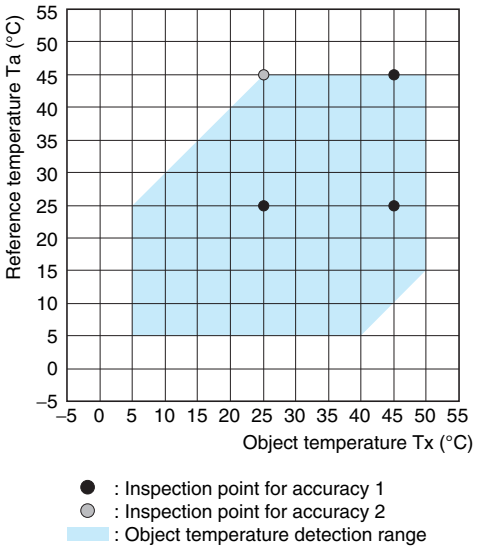

Connections

Thermal Sensor Configuration Diagram

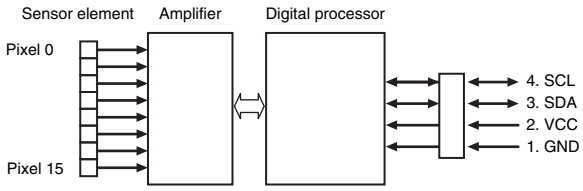

Note: The 1×8 type has pixels 0 to 7.

Terminal Arrangement

Terminal	Name	Function	Remarks
1	GND	Ground	
2	VCC	Positive power supply voltage input	
3	SDA	Serial data I/O line	Connect the open-drain SDA terminal to a pull-up resistor.
4	SCL	Serial clock input	Connect the open-drain SCL terminal to a pull-up resistor.

Field of View Characteristics

D6T-44L-06

Field of view in X Direction

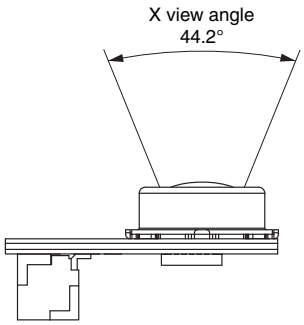

Field of view in Y Direction

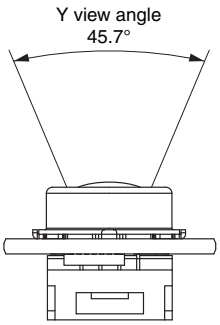

Detection Area for Each Pixel

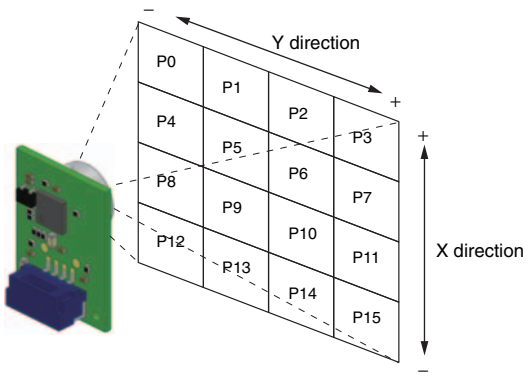

Note: Definition of view angle: Using the maximum Sensor output as a reference, the angular range where the Sensor output is 50% or higher when the angle of the Sensor is changed is defined as the view angle.

D6T-8L-06

Field of view in X Direction

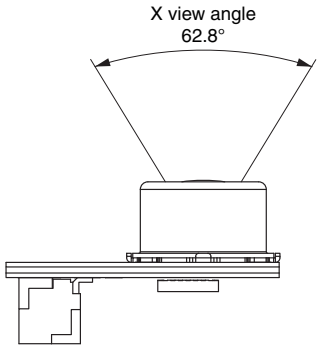

Field of view in Y Direction

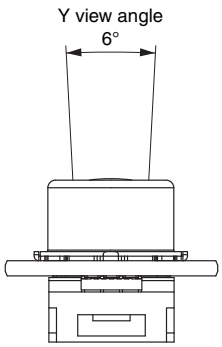

Detection Area for Each Pixel

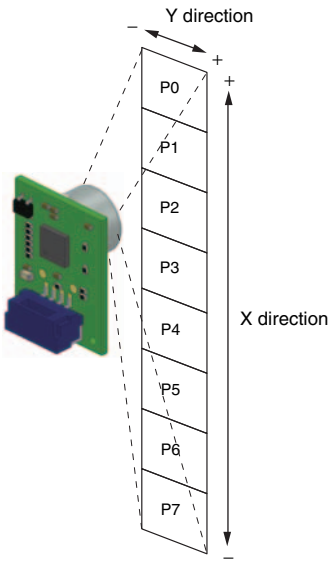

Note: Definition of view angle: Using the maximum Sensor output as a reference, the angular range where the Sensor output is 50% or higher when the angle of the Sensor is changed is defined as the view angle.

Dimensions (Unit: mm)

D6T-44L-06

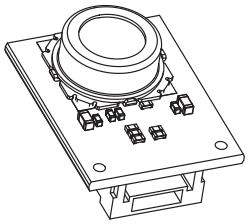

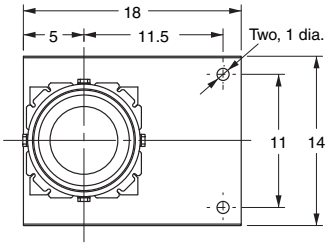

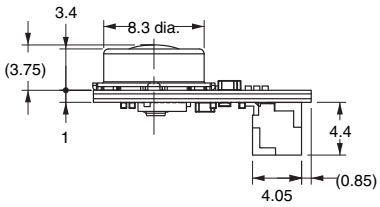

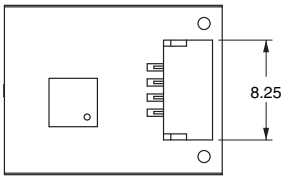

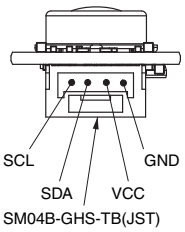

Supporting and Mounting Area (Shaded Portion)
Top View

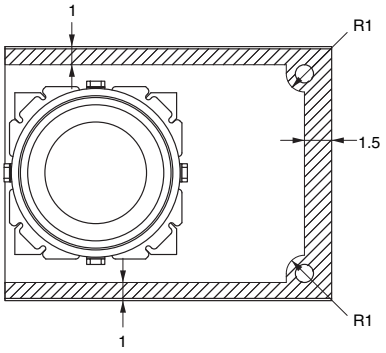

Bottom View

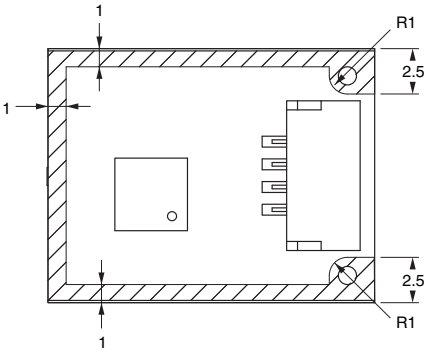

Note: Due to insulation distance limitations, do not allow metal parts to come into contact with the Sensor.

D6T-8L-06

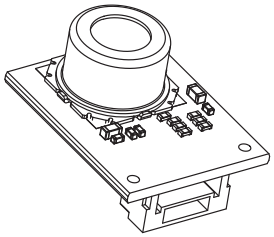

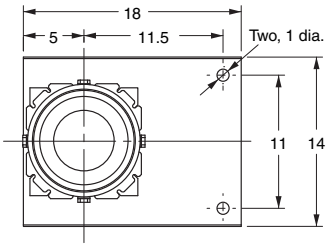

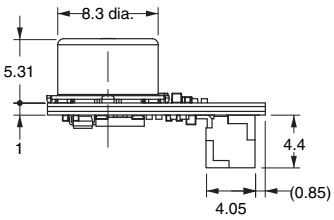

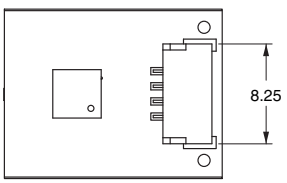

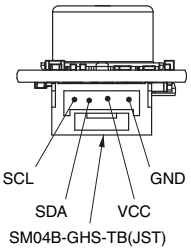

Supporting and Mounting Area (Shaded Portion)
Top View

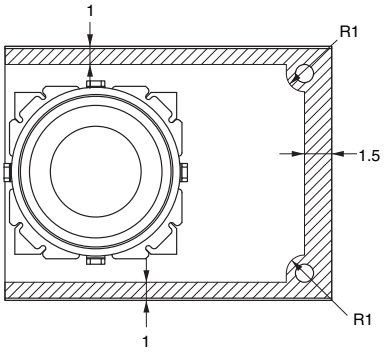

Bottom View

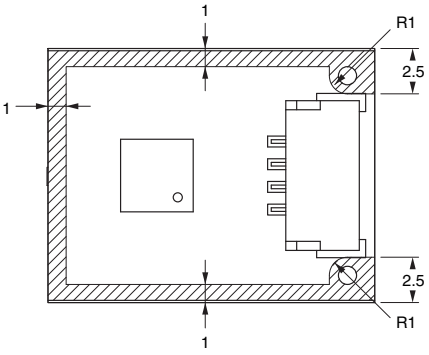

Note: Due to insulation distance limitations, do not allow metal parts to come into contact with the Sensor.

Note: Unless otherwise specified, a tolerance of ±0.3 mm applies to all dimensions.

Safety Precautions

Precautions for Correct Use

● Installation

- The Sensor may not achieve the characteristics given in this datasheet due to the ambient environment or installation location. Before using the Sensor, please acquire an adequate understanding and make a prior assessment of Sensor characteristics in your actual system.

● Operating Environment

- Do not use the Sensor in locations where dust, dirt, oil, and other foreign matter will adhere to the lens. This may prevent correct temperature measurements.
- Do not use the Sensor in any of the following locations.
  - Locations where the Sensor may come into contact with water or oil
  - Outdoors
  - Locations subject to direct sunlight.
  - Locations subject to corrosive gases (in particular, chloride, sulfide, or ammonia gases).
  - Locations subject to extreme temperature changes
  - Locations subject to icing or condensation.
  - Locations subject to excessive vibration or shock.

● Noise Countermeasures

- The Sensor does not contain any protective circuits. Never subject it to an electrical load that exceeds the absolute maximum ratings for even an instance. The circuits may be damaged. Install protective circuits as required so that the absolute maximum ratings are not exceeded.
- Keep as much space as possible between the Sensor and devices that generates high frequencies (such as high-frequency welders and high-frequency sewing machines) or surges.
- Attach a surge protector or noise filter on nearby noise-generating devices (in particular, motors, transformers, solenoids, magnetic coils, or devices that have an inductance component).
- In order to prevent inductive noise, separate the connector of the Sensor from power lines carrying high voltages or large currents. Using a shielded line is also effective.
- If a switching requlator is used, check that malfunctions will not occur due to switching noise from the power supply.

● Handling

- This Sensor is a precision device. Do not drop it or subject it to excessive shock or force. Doing so may damage the Sensor or change its characteristics. Never subject the connector to unnecessary force. Do not use a Sensor that has been dropped.
- Take countermeasures against static electricity before you handle the Sensor.
- Turn OFF the power supply to the system before you install the Sensor. Working with the Sensor while the power supply is turned ON may cause malfunctions.
- Secure the Sensor firmly so that the optical axis does not move.
- Install the Sensor on a flat surface. If the installation surface is not even, the Sensor may be deformed, preventing correct measurements.
- Do not install the Sensor with screws. Screws may cause the resist to peel from the board. Secure the Sensor in a way that will not cause the resist to peel.
- Always check operation after you install the Sensor.
- Use the specified connector (GHR-04 from JST) and connect it securely so that it will not come off. If you solder directly to the connector terminals, the Sensor may be damaged.
- Make sure to wire the polarity of the terminals correctly. Incorrect polarity may damage the Sensor.
- Never attempt to disassemble the Sensor.

- Application examples provided in this document are for reference only. In actual applications, confirm equipment functions and safety before using the product.
- Consult your OMRON representative before using the product under conditions which are not described in the manual or applying the product to nuclear control systems, railroad systems, aviation systems, vehicles, combustion systems, medical equipment, amusement machines, safety equipment, and other systems or equipment that may have a serious influence on lives and property if used improperly. Make sure that the ratings and performance characteristics of the product provide a margin of safety for the system or equipment, and be sure to provide the system or equipment with double safety mechanisms.

OMRON Corporation
ELECTRONIC AND MECHANICAL COMPONENTS COMPANY **Contact: www.omron.com/ecb**

Cat. No. A216-E1-02
0413(0612)(O)