PRODUCT DETAILS

ARTICLE: 18962FB

WHEEL P 80X30/40 PLAIN BORE SWIVEL FORK M22 BOLT HOLE F.12



Wheel series P

Monolitic polyammide 6 wheels available with standard shielded or stainless steel precision ball bearings; standard or stainless steel roller bearing; plain bore.
Plain bore wheel.

Castor series M22

M22 series, Medium-light pressed steel fork assemblies; swivel version has double ball raceways. Zincplated.

Sigle bolt hole fixing for bolt diam. 10-12 mm.

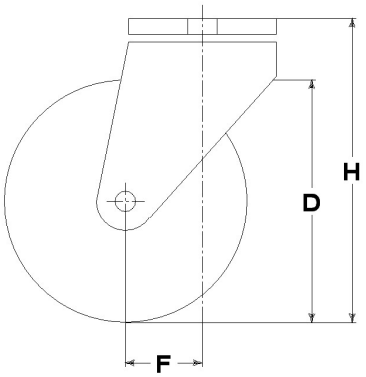

Technical data

Wheel diameter	D	80 mm
Tyre width	E	30,0 mm
Bore diameter	d	15 mm
Weight article		0,540 kg
Hub width	L	40 mm
Overall height	H	106 mm
Fixing bolt diameter	g	M10-12
Offset	F	33 mm
Fork width	U	40 mm
Load Capacity		120 kg

Related Articles

Spare part wheel: 4021
Version with thread-guards: 18962PFFB
Version with trailing brake: 18962FRFB
Version with trailing brake and thread-guards: 18962FRPFFB

GENERAL INFORMATION / RECOMMENDATIONS AND WARNINGS
The cited text and the complete catalogue in their most up-dated versions are available in the OEM's website page www.lagspa.it/downloads. The dimensions, descriptions, specifications and illustrations herein are indicative and subject to variations without notice. The fact that products are illustrated herein does not necessarily imply they are available from stock nor does it place us under any obligation to supply them.
Tests carried out refer to the original products with original accessories: the replacement of one of the components with others of different manufacture might prevent the same results from being achieved and will automatically invalidate any guarantee. Please contact our technical service concerning any special application.