Product data sheet
Characteristics

XMLZL017
Fixing bracket - for pressure sensor XMLR - set of 1 piece



Main

Range of product	OsiSense XM
Accessory / separate part category	Mounting and fixing accessories
Accessory / separate part destination	Electronic pressure sensor

Complementary

Accessory / separate part type	Bracket
Product compatibility	XMLR
Product weight	0.029 kg

The information provided in this documentation contains general descriptions and/or technical characteristics of the performance of the products contained herein.
This documentation is not intended as a substitute for and is not to be used for determining suitability or reliability of these products for specific user applications.
It is the duty of any such user or integrator to perform the appropriate and complete risk analysis, evaluation and testing of the products with respect to the relevant specific application or use thereof.
Neither Schneider Electric Industries SAS nor any of its affiliates or subsidiaries shall be responsible or liable for misuse of the information contained herein.

Dimensions

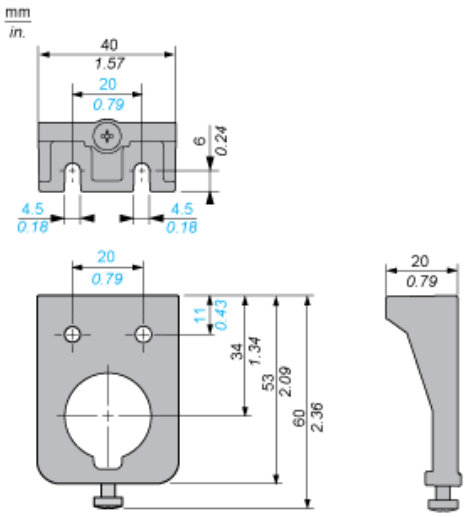
mm
in.
40
1.57
20
0.79
6
0.24
4.5
0.18
4.5
0.18
20
0.79
11
0.43
34
1.34
53
2.09
60
2.36
20
0.79