Brand of NTN corporation

Technical data

EXFLZ208

Bearing units



Grey cast housing, radial insert ball bearing with eccentric locking collar, seal with slinger

KIT CONTENT

EX.208.G2, FLZ208

VISUAL (S)

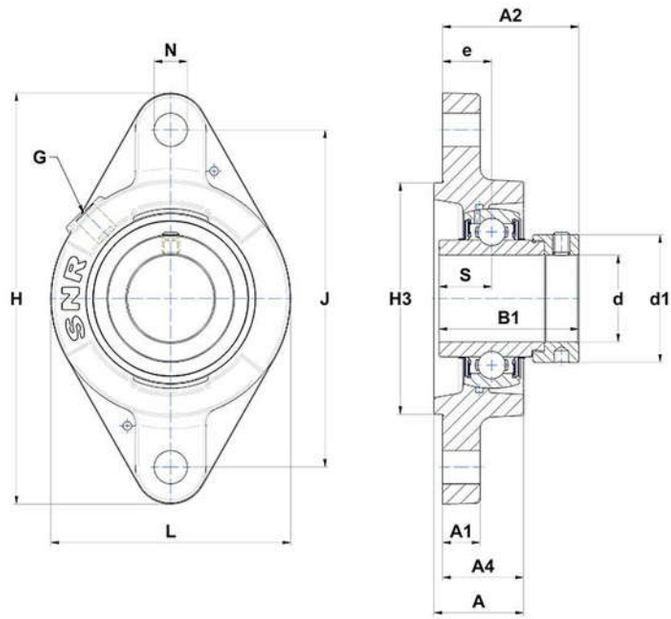

PRODUCT DEFINITION

Brand	SNR
A - Housing height	36 mm
A1 - Housing foot height / flange height	13 mm
A2 - Total height from mounting surface	54,9 mm
A4 - Housing height from mounting surface	32 mm
B - Width of Inner Ring	42,8 mm

EXFLZ208
Bearing units

PRODUCT DEFINITION	
B1 - Overall width Inner Ring	56,3 mm
d - Shaft diameter	40 mm
d1 - Outer dia of eccent. Lock. collar / nut of adapter sleeve	58 mm
e - Distance mounting surface to bearing center	20 mm
G - Grease fitting	R1/8"
H - Housing length, width or diameter	172 mm
H3 - Centering dia	100 mm
J - Mounting holes distance	143,5 mm
L - Housing width / diameter	105 mm
N - Mounting hole dimension	14 mm
S - Distance front side/bearing centre	21,4 mm

PRODUCT PERFORMANCE	
C - Dynamic load rating	29600000 mN
C0 - Static load rating	18200000 mN
Operating temperature min.	253,15 °K
Operating temperature max.	373,15 °K

OTHER FEATURES	
Mass	1,88 kg
Recommended tightening torque for set screw	11.5 N-m