

Model Number

NBN40-U1L-Z2

Features

- **Sensor head bidirectional and rotatable**
- **Basic series**
- **40 mm non-flush**
- **2-wire DC**
- **2 LEDs indicator for 360° visibility**

Accessories

MHW 01
Modular mounting bracket

Technical Data

General specifications		
Switching element function		DC NO/NC
Rated operating distance	s_n	40 mm
Installation		non-flush
Output polarity		DC
Assured operating distance	s_a	0 ... 32.4 mm
Reduction factor r_{Al}		0.39
Reduction factor r_{Cu}		0.37
Reduction factor r_{304}		0.76
Nominal ratings		
Operating voltage	U_B	5 ... 60 V DC
Switching frequency	f	0 ... 100 Hz
Hysteresis	H	1 ... 10 typ. 5 %
Reverse polarity protection		reverse polarity tolerant
Short-circuit protection		pulsing
Voltage drop	U_d	≤ 5 V
Rated insulation voltage	U_{BIS}	60 V
Operating current	I_L	2 ... 200 mA
Off-state current	I_r	0 ... 1 mA typ. 0.7 mA
Switching state indication		2 LED, yellow
Functional safety related parameters		
$MTTF_d$		1170 a
Mission Time (T_M)		20 a
Diagnostic Coverage (DC)		0 %
Ambient conditions		
Ambient temperature		-25 ... 85 °C (-13 ... 185 °F)
Storage temperature		-25 ... 85 °C (-13 ... 185 °F)
Mechanical specifications		
Connection type		screw terminals
Core cross-section		≤ 2.5 mm^2
Housing material		PA
Sensing face		PA
Housing base		plastic
Protection degree		IP68 / IP69K
Mass		225 g
Note		Tightening torque: 1.8 Nm (housing) Tightening torque: 1.0 Nm (Screw terminal)
Compliance with standards and directives		
Standard conformity		
Standards		EN 60947-5-2:2007 IEC 60947-5-2:2007
Approvals and certificates		
Protection class		II
Rated insulation voltage	U_i	60 V
Design-impulse-voltage withstand	U_{imp}	800 V
UL approval		cULus Listed, General Purpose
CSA approval		cCSAus Listed, General Purpose

Dimensions

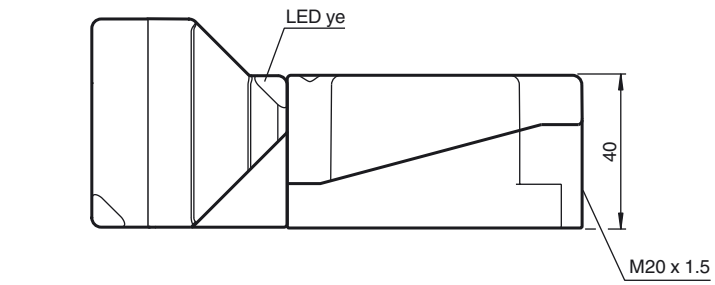

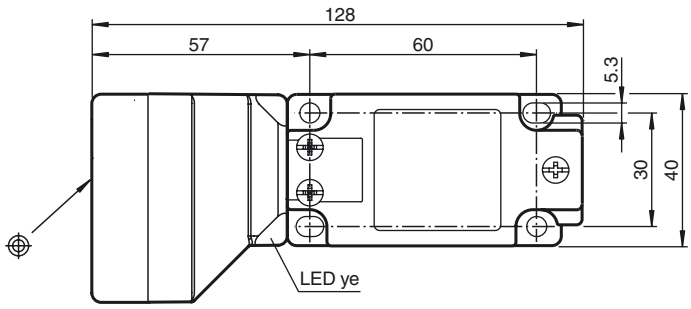

Release date: 2013-07-18 13:10 Date of issue: 2013-07-18 233001_eng.xml

Electrical Connection

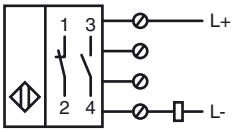

Release date: 2013-07-18 13:10 Date of issue: 2013-07-18 233001_eng.xml

Refer to “General Notes Relating to Pepperl+Fuchs Product Information”.
Pepperl+Fuchs Group www.pepperl-fuchs.com
USA: +1 330 486 0001 fa-info@us.pepperl-fuchs.com
Germany: +49 621 776 4411 fa-info@de.pepperl-fuchs.com
Singapore: +65 6779 9091 fa-info@sg.pepperl-fuchs.com
PEPPERL+FUCHS SENSING YOUR NEEDS