John Guest®

Data Sheet DS-15STV/2

15mm Stop Valve

The John Guest 15mm Stop Valve has been developed to satisfy the requirements of the U.K. domestic plumbing market.

Two full handle rotations are required to turn off valve.

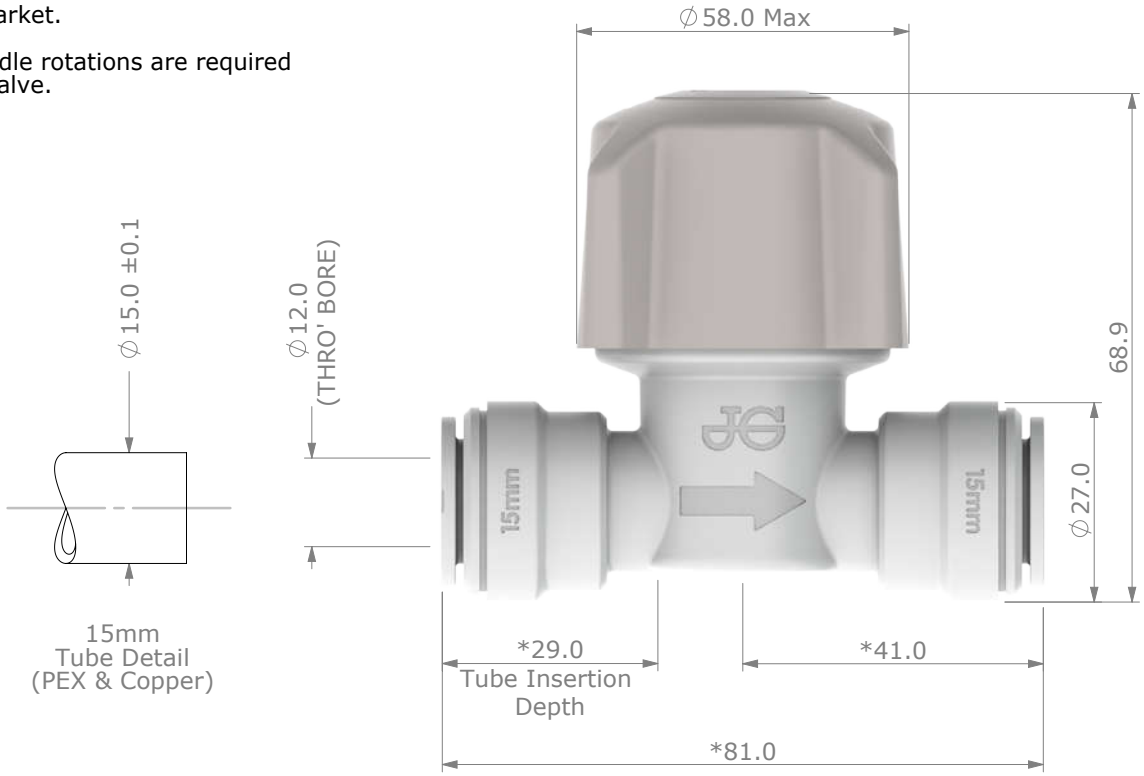

*With Collet(s)in release position

Dimensions in mm

Parts List

Part Description	Material	Part Description	Material
Body	Acetal Copolymer (Unfilled), White	Top Cover	Nylon 66 (35% Glass Filled), Natural
Locking Ring	Acetal Copolymer (Unfilled), White	Handle	Polypropylene (25% Glass Filled), Light Grey
Face Seal	Ethylene Propylene (EPDM), Black	O'Rings	Ethylene Propylene (EPDM), Black
Seal Carrier	Acetal Copolymer (30% Glass Filled), Natural	Support Washers	Acetal Copolymer (Unfilled), Natural
Spindle	Nylon 66 (35% Glass Filled), Natural	Collets	Acetal Copolymer (Unfilled), White & Stainless Steel

Technical Information

Working Pressures & Temperatures	Applications
12 Bar at 20 °C 6 Bar at 65 °C Minumum Temperature 1 °C	Domestic Plumbing Hot and Cold Use Only ✓

Speedfit®

The Copyright in this drawing and the products referred thereon belong to John Guest International Limited and this drawing nor the information contained herein shall be produced in any form or used for any purpose without written consent © 2017

The company has a policy of continuous research and development and reserves the right to amend without notice the specification and design of all products illustrated. For details of Terms and Conditions and any other technical enquiries, please contact our Customer Services Department on 01895 449233. Alternatively, call our Technical Helpdesk on 01895 423333

171013