Air preparation unit, 2-part, Series AS2-ACD

- G 1/4 G 3/8
- filter porosity 5 µm
- lockable
- for padlocks
- with pressure gauge
- suitable for ATEX



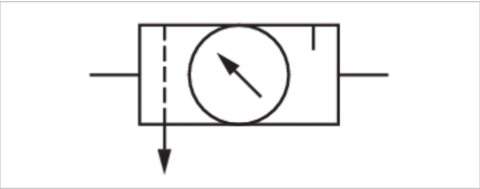

Type	2-part, Can be assembled into blocks
Parts	Filter pressure regulator, Lubricator
Mounting orientation	vertical
Certificates	suitable for ATEX
Working pressure min./max.	1,5 ... 16 bar
Ambient temperature min./max.	-10 ... 50 °C
Medium temperature min./max.	-10 ... 50 °C
Medium	Compressed air Neutral gases
Regulator type	Diaphragm-type pressure regulator
Regulator function	with relieving air exhaust
Adjustment range min./max.	0,5 ... 8 bar
Pressure supply	single
Filter reservoir volume	28 cm³
Filter element	exchangeable
Lubricator reservoir volume	40 cm³
Type of filling	Manual oil filling Semi-automatic oil filling during operation
Weight	See table below

Technical data

Part No.	Port	filter porosity	Flow Qn	Condensate drain
R412006298	G 1/4	5 µm	1800 l/min	semi-automatic, open without pressure
R412006304	G 1/4	5 µm	1800 l/min	semi-automatic, open without pressure
R412006299	G 1/4	5 µm	1800 l/min	fully automatic, open without pressure
R412006300	G 1/4	5 µm	1800 l/min	fully automatic, closed without pressure
R412006307	G 3/8	5 µm	2000 l/min	semi-automatic, open without pressure
R412006308	G 3/8	5 µm	2000 l/min	fully automatic, open without pressure
R412006309	G 3/8	5 µm	2000 l/min	fully automatic, closed without pressure

Part No.	Pressure gauge	Reservoir	Protective guard	Weight	Fig.
R412006298	with pressure gauge	Polycarbonate	Polyamide	0,633 kg	Fig. 1
R412006304	with pressure gauge	Die cast zinc	-	0,633 kg	Fig. 1
R412006299	with pressure gauge	Polycarbonate	Polyamide	0,676 kg	Fig. 1
R412006300	with pressure gauge	Polycarbonate	Polyamide	0,676 kg	Fig. 1
R412006307	with pressure gauge	Polycarbonate	Polyamide	0,633 kg	Fig. 2
R412006308	with pressure gauge	Polycarbonate	Polyamide	0,676 kg	Fig. 2
R412006309	with pressure gauge	Polycarbonate	Polyamide	0,676 kg	Fig. 2

Nominal flow Qn with secondary pressure p2 = 6 bar at Δp = 1 bar

Suitable for use in Ex zones 1, 2, 21, 22.

Technical information

The pressure dew point must be at least 15 °C under ambient and medium temperature and may not exceed 3 °C .
Note: Polycarbonate reservoirs are susceptible to solvents, supplementary information can be found at "Customer information".
Suitable for use in Ex zones 1, 2, 21, 22.
A change in the flow direction (from air supply on the left to air supply on the right) occurs by rotating installation by 180° about the vertical axis. Please see the operating instructions for further details.
Also suitable for separation of fluid oil or water due to the design.

Max. achievable compressed air class acc. to ISO 8573-1:2010 6 : 7 : -

Technical information

Material	
Housing	Polyamide
Front plate	Acrylonitrile butadiene styrene
Seals	Acrylonitrile butadiene rubber
Threaded bushing	Die cast zinc
Reservoir	Polycarbonate Die cast zinc
Protective guard	Polyamide
Filter insert	Polyethylene

Dimensions

Dimensions in mm, Fig. 1

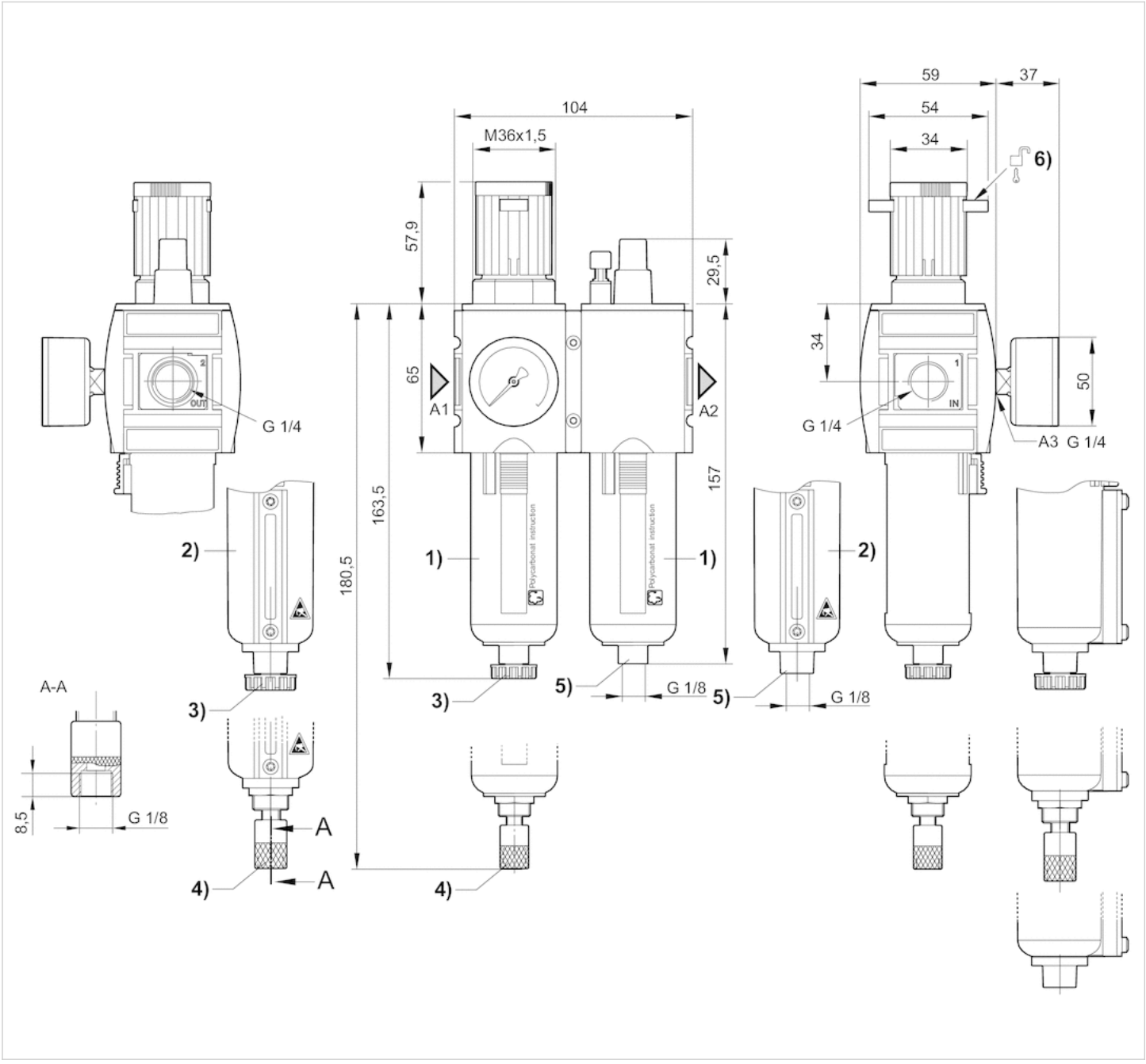

A1 = input
A2 = output
A3 = pressure gauge connection
A7 = condensate drain
1) Plastic reservoir and protective guard with window
2) Metal reservoir with level indicator
3) Semi-automatic condensate drain
4) Fully automatic condensate drain
5) Port for semi-automatic oil filling
6) Mounting option for padlocks, max. shackle Ø 8

Dimensions in mm, Fig. 2

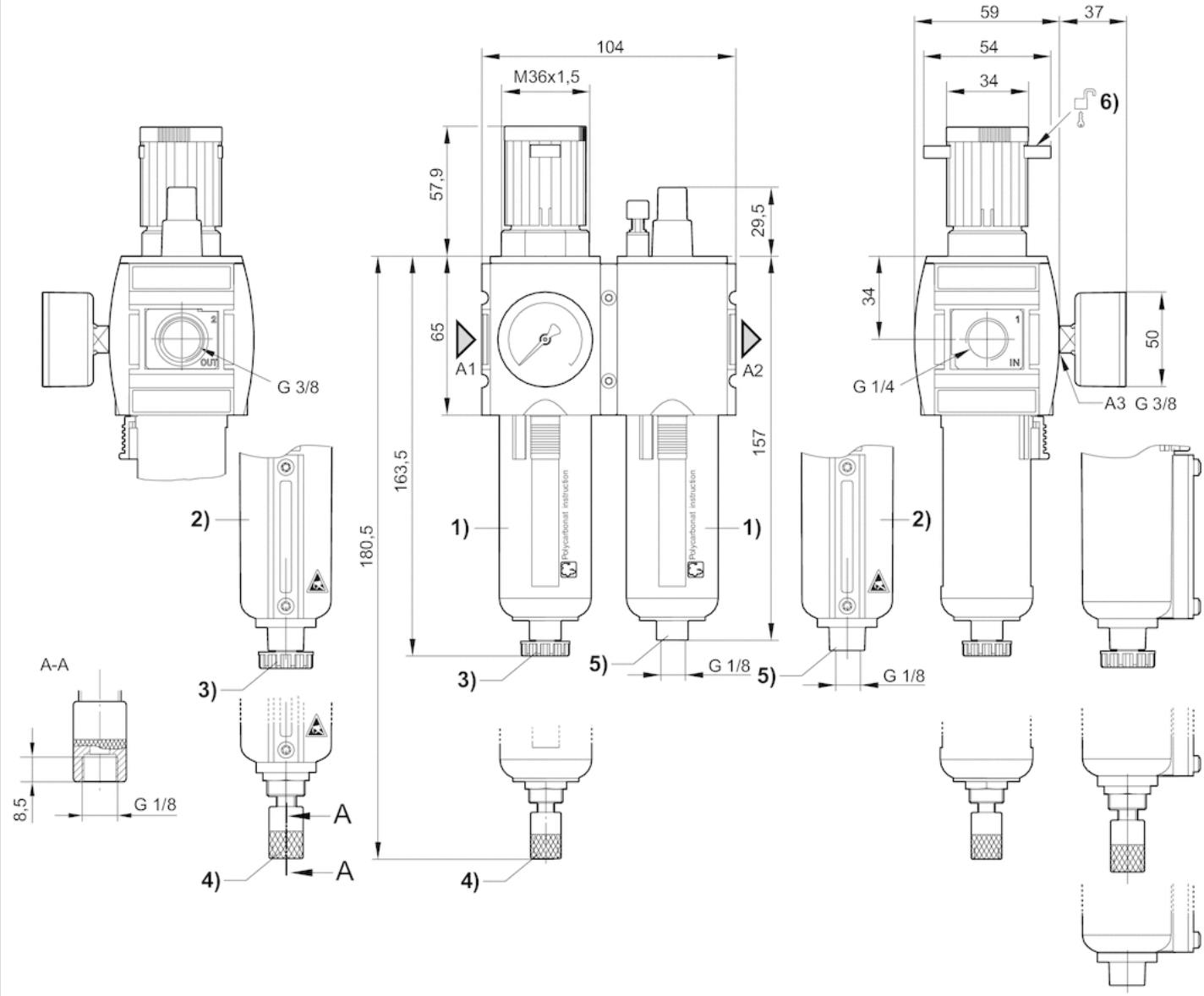

A1 = input
A2 = output
A3 = pressure gauge connection
A7 = condensate drain
1) Plastic reservoir and protective guard with window
2) Metal reservoir with level indicator
3) Semi-automatic condensate drain
4) Fully automatic condensate drain
5) Port for semi-automatic oil filling
6) Mounting option for padlocks, max. shackle Ø 8

Diagrams

Lubricator activation margin

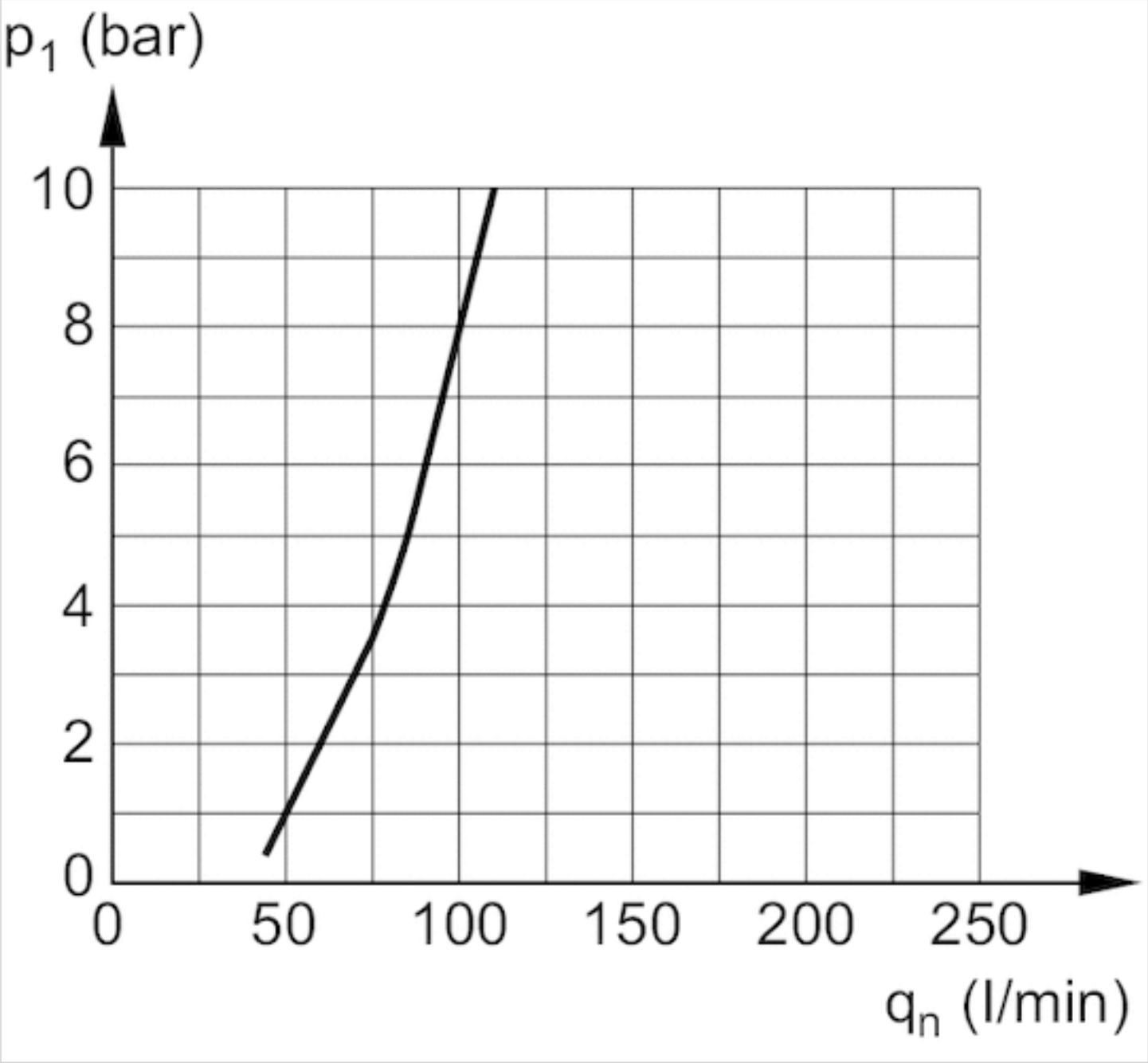

p1 = working pressure
qn = nominal flow

Flow rate characteristic (p2: 0,5 - 8 bar)

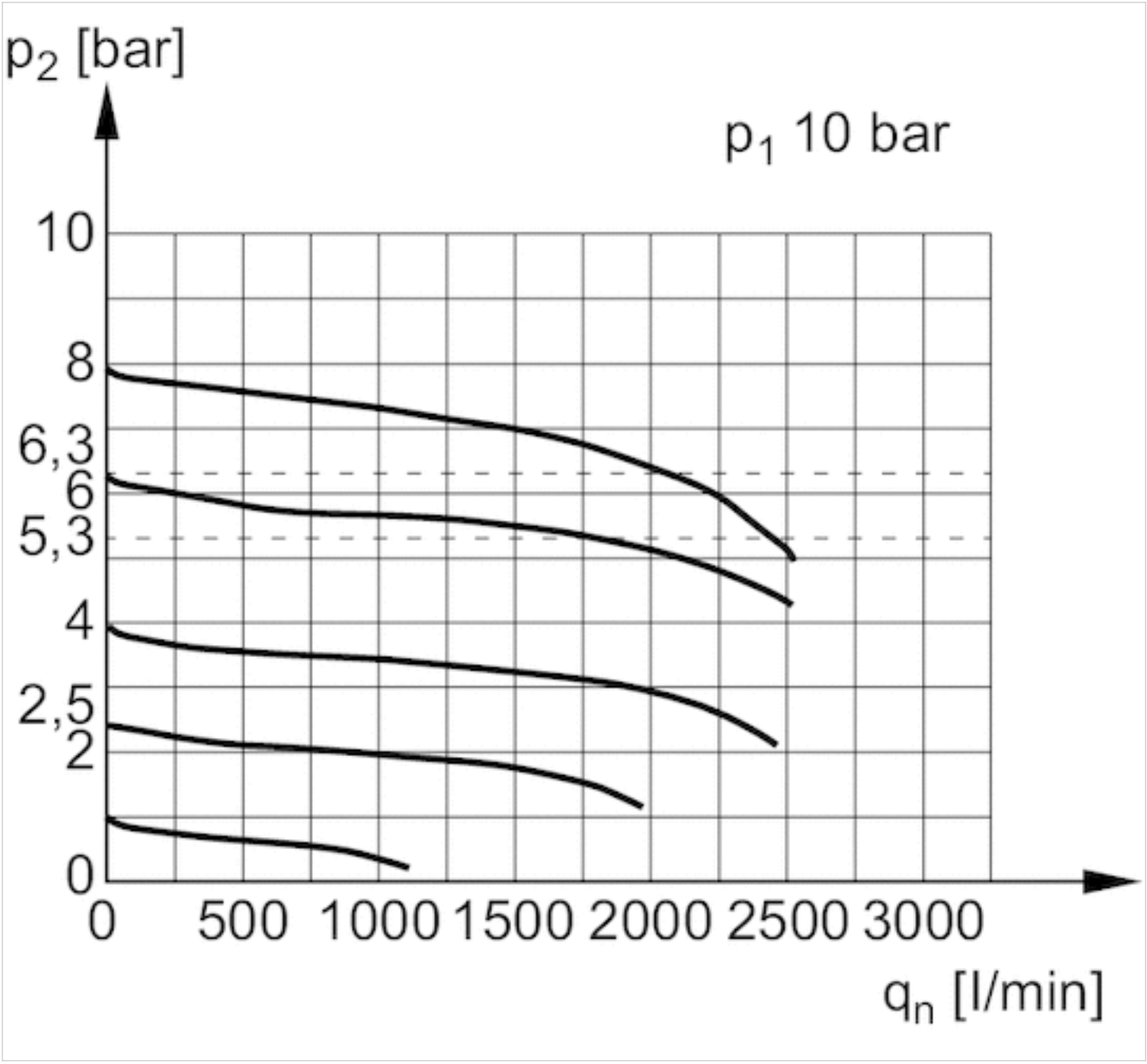

p1 = Working pressure
p2 = Secondary pressure
qn = Nominal flow

Accessories overview

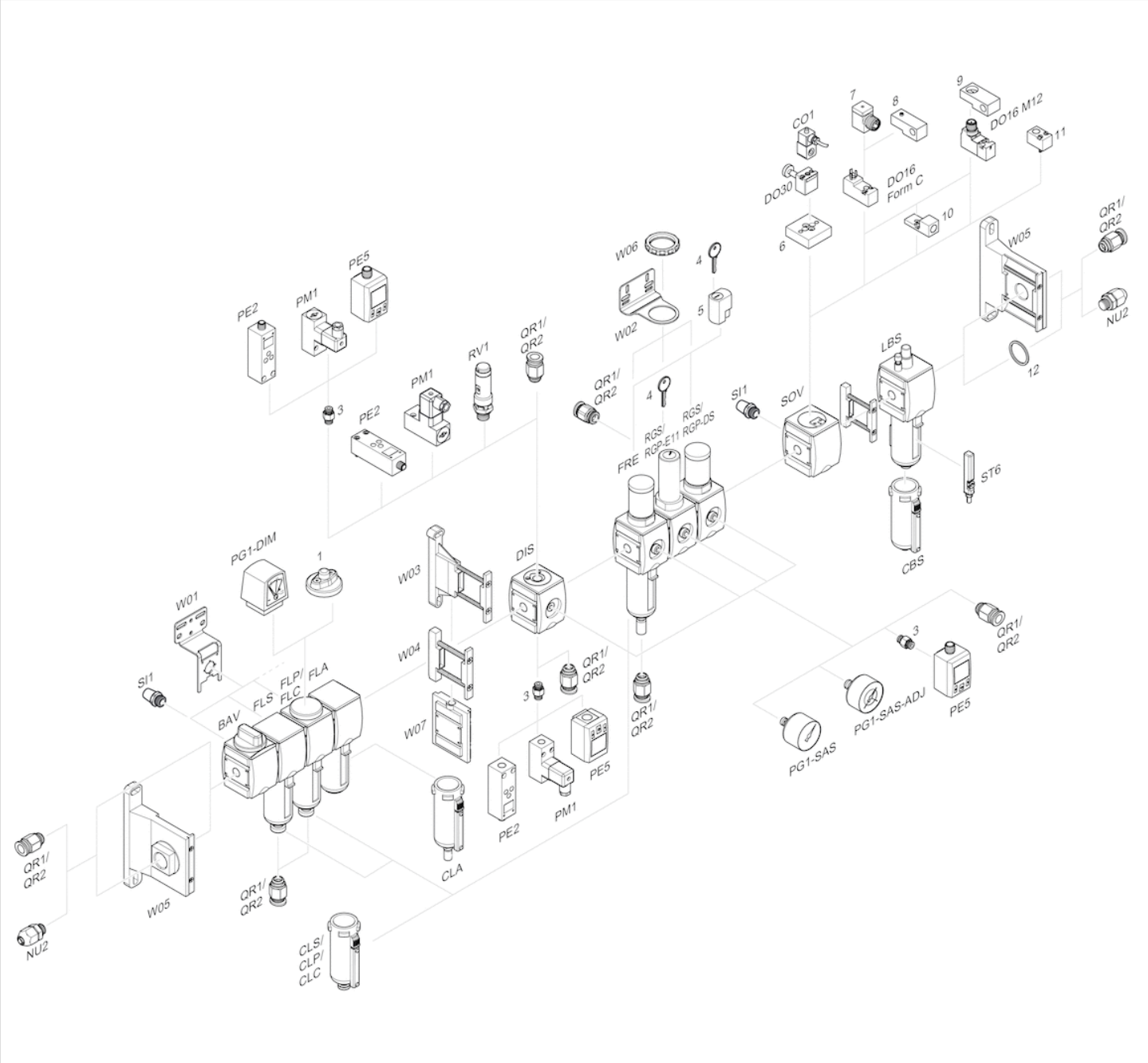

1 = contamination display
3 = Double nipple
4 = Key for E11 locking
5 = mortise lock
6 = Transition plate DO30
7 = Adapter, Series CON-VP
8 = Mounting aid DO16, form C
9 = Mounting aid DO16, M12
10 = Adapter for external pilot air
11 = Adapter pneumatic operation
12 = Sealing ring