BID2-G180-AP6-H1141/S212
Inductive Sensor – For High Pressures

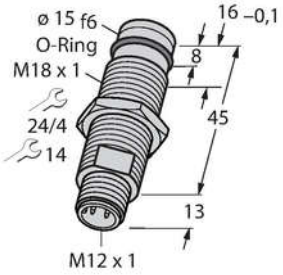

Technical data

Type	BID2-G180-AP6-H1141/S212
ID	16885
Special version	S212 corresponds to: new production technology (core and coil encapsulated)
General data	
Rated switching distance	2 mm
Mounting conditions	Flush
Secured operating distance	≤ (0.81 × Sn) mm
Correction factors	St37 = 1; Al = 0.3; stainless steel = 0.7; Ms = 0.4
Repeat accuracy	≤ 2 % of full scale
Static pressure	≤ 500 bar
Dynamic pressure	≤ 350 bar
Admissible contact medium	electrically non-conductive
Temperature drift	≤ ±10 %
Hysteresis	3…15 %
Electrical data	
Operating voltage	10…30 VDC
Residual ripple	≤ 10 % U_{ss}
DC rated operational current	≤ 200 mA
No-load current	15 mA
Residual current	≤ 0.1 mA
Isolation test voltage	≤ 0.5 kV
Short-circuit protection	yes / Cyclic
Voltage drop at I_e	≤ 1.8 V
Wire breakage/Reverse polarity protection	yes / Complete
Output function	3-wire, NO contact, PNP

Features

- Threaded barrel, M18 x 1
- Stainless steel, 1.4305
- Admissible pressure static/dynamic 500/350 bar
- DC 3-wire, 10…30 VDC
- NO contact, PNP output
- M12 x 1 male connector

Wiring diagram

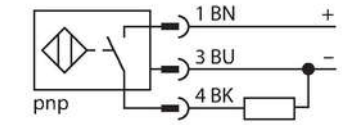

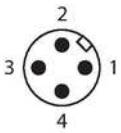

Functional principle

Inductive sensors detect metal objects contactless and wear-free. For this purpose they use a high-frequency electromagnetic AC field that interacts with the target. The sensors hosting a ferrite core coil generate the AC field through an LC resonant circuit.
Pressure resistant inductive sensors withstand pressures of up to 500 bar which makes them perfectly suited for position control in hydraulic cylinders.

BID2-G180-AP6-H1141/S212| 17-02-2022 19-18 | Technical modifications reserved

Technical data

Switching frequency	2 kHz
Mechanical data	
Design	Threaded barrel, M18 × 1
Dimensions	58 mm
Housing material	Metal, 1.4305 (AISI 303)
Active area material	Plastic, PA12-GF30
Max. tightening torque of housing nut	25 Nm
Electrical connection	Connector, M12 × 1
Environmental conditions	
Ambient temperature	-25…+85 °C
Vibration resistance	55 Hz (1 mm)
Shock resistance	30 g (11 ms)
Protection class	IP67
MTTF	1804 years acc. to SN 29500 (Ed. 99) 40 °C

Mounting instructions

Mounting instructions/Description

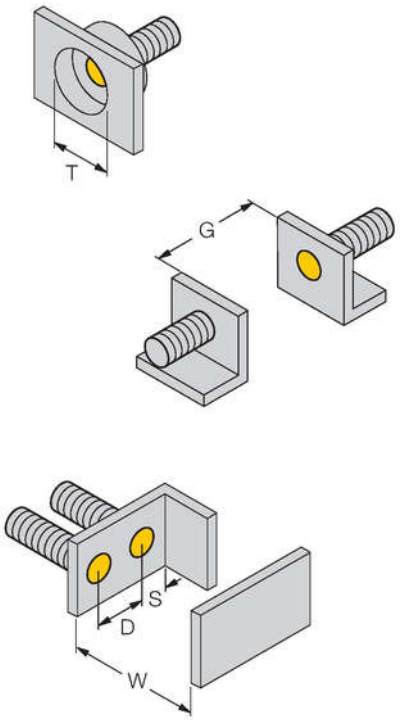

Distance D	2 x B
Distance W	3 x Sn
Distance T	3 x B
Distance S	1.5 x B
Distance G	6 x Sn
Diameter active area B	Ø 18 mm

BID2-G180-AP6-H1141/S212| 17-02-2022 19-18 | Technical modifications reserved

Accessories

Dimension drawing	Type	ID	
	RKC4T-2/TEL	6625010	Connection cable, female M12, straight, 3-pin, cable length: 2 m, sheath material: PVC, black; cULus approval; other cable lengths and qualities available, see www.turck.com

BID2-G180-AP6-H1141/S212| 17-02-2022 19-18 | Technical modifications reserved