PI2205

Flush pressure sensor with display

PI-004-REZ01-MFRKG/US/ /P

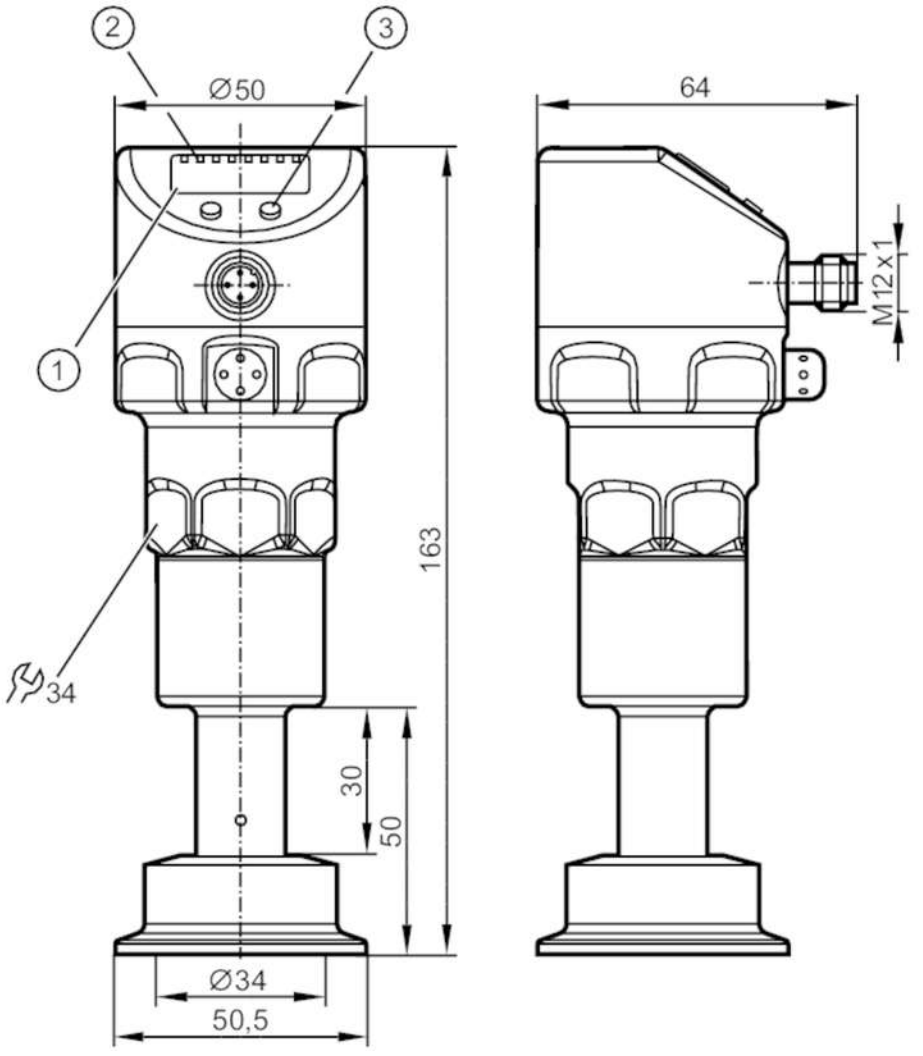

1 alphanumeric display 4-digit
2 status LEDs
3 programming button

EC 1935/2004 EHEDG Certified FCM IO-Link

Product characteristics			
Number of inputs and outputs	Number of digital outputs: 2; Number of analogue outputs: 1		
Measuring range	-1...4 bar	-14.5...58 psi	-100...400 kPa
Process connection	Clamp DN40 (1,5") DIN 32676 (ISO 2852)		
Application			
Special feature	Gold-plated contacts		
Application	flush mountable for the food and beverage industry		
Media	viscous media and liquids with suspended particles; liquids and gases		
Medium temperature [°C]	-20...200		
Min. bursting pressure	50 bar	725 psi	5000 kPa
Pressure rating	30 bar	435 psi	3000 kPa
Type of pressure	relative pressure; vacuum		
Electrical data			
Min. insulation resistance [MΩ]	100; (500 V DC)		

PI2205

Flush pressure sensor with display

PI-004-REZ01-MFRKG/US/ /P

Protection class		III		
Reverse polarity protection		yes		
Integrated watchdog		yes		
2-wire				
Operating voltage	[V]	20...32 DC		
Current consumption	[mA]	3.6...21		
Power-on delay time	[s]	1		
3-wire				
Operating voltage	[V]	18...32 DC		
Current consumption	[mA]	< 45		
Power-on delay time	[s]	0.5		
Inputs / outputs				
Number of inputs and outputs		Number of digital outputs: 2; Number of analogue outputs: 1		
Outputs				
Total number of outputs		2		
Output signal		switching signal; analogue signal; IO-Link; (configurable)		
Electrical design		PNP/NPN		
Number of digital outputs		2		
Output function		normally open / normally closed; (parameterisable)		
Number of analogue outputs		1		
Analogue current output	[mA]	4...20, invertible; (scalable)		
Short-circuit protection		yes		
Type of short-circuit protection		pulsed		
Overload protection		yes		
2-wire				
Max. load	[Ω]	300		
3-wire				
Max. voltage drop switching output DC	[V]	2		
Permanent current rating of switching output DC	[mA]	250		
Switching frequency DC	[Hz]	125		
Max. load	[Ω]	(Ub - 10 V) / 20 mA		
Measuring/setting range				
Measuring range		-1...4 bar	-14.5...58 psi	-100...400 kPa
Set point SP		-0.99...4 bar	-14.35...58 psi	-99...400 kPa
Reset point rP		-1...3.99 bar	-14.5...57.85 psi	-100...399 kPa
Analogue start point		-1...3 bar	-14.5...43.5 psi	-100...300 kPa
Analogue end point		0...4 bar	0...58 psi	0...400 kPa
In steps of		0.005 bar	0.05 psi	0.5 kPa
Factory setting			SP1 = 1.000 bar	rP1 = 0.920 bar
			SP2 = 3.000 bar	rP2 = 2.920 bar
			ASP = 0.000 bar	AEP = 4.000 bar

PI2205

Flush pressure sensor with display

PI-004-REZ01-MFRKG/US/ /P

Accuracy / deviations		
Switch point accuracy [% of the span]		< ± 0,2; (Turn down 1:1)
Repeatability [% of the span]		< ± 0,1; (with temperature fluctuations < 10 K; Turn down 1:1)
Characteristics deviation [% of the span]		< ± 0,2; (Turn down 1:1 , linearity, incl. hysteresis and repeatability , limit value setting to DIN EN IEC 62828-1)
Linearity deviation [% of the span]		< ± 0,15; (Turn down 1:1)
Hysteresis deviation [% of the span]		< ± 0,15; (Turn down 1:1)
Long-term stability [% of the span]		< ± 0,1; (Turn down 1:1; per year)
Temperature coefficient zero point [% of the span / 10 K]		< ± 0,2; (0...200 °C)
Temperature coefficient span [% of the span / 10 K]		< ± 0,15; (0...200 °C)
Response times		
Damping process value dAP [s]		0...30
Damping for the analogue output dAA [s]		0.01...99.99
2-wire		
Step response time analogue output [ms]		45
3-wire		
Min. response time of switching output (dAP) [ms]		3
Step response time analogue output [ms]		7
Interfaces		
Communication interface		IO-Link
Transmission type		COM2 (38,4 kBaud)
IO-Link revision		1.0
SDCI standard		IO-Link Communication Specification, Version 1.0, January 2009, Ordner No: 10.002
Profiles		no profile
SIO mode		yes
Required master port type		A
Process data analogue		1
Process data binary		2
Min. process cycle time [ms]		2.3
Supported DeviceIDs	**Type of operation**	**DeviceID**
	default	104
Operating conditions		
Ambient temperature [°C]		-25...80
Note on ambient temperature		Medium temperature: ≤ 160 °C
Ambient temperature [°C]		-25...60

PI2205

Flush pressure sensor with display

PI-004-REZ01-MFRKG/US/ /P

Note on ambient temperature		Medium temperature: ≤ 200 °C	
Storage temperature	[°C]	-25...100	
Protection		IP 67; IP 68; IP 69K	
Tests / approvals			
EMC		DIN EN 61000-6-2	
		DIN EN 61000-6-3	
Shock resistance		DIN EN 60068-2-27	50 g (11 ms)
Vibration resistance		DIN EN 60068-2-6	20 g (10...2000 Hz)
MTTF	[years]	149	
Note on approval		Including free 6-point calibration certificate.	
Mechanical data			
Weight	[g]	1072	
Housing		cylindrical	
Dimensions	[mm]	Ø 50 / L = 163	
Materials		stainless steel (316L/1.4404); stainless steel (316L/1.4435); PBT; PEI; PFA	
Materials (wetted parts)		stainless steel (316L/1.4435)	
Min. pressure cycles		10 million	
Process connection		Clamp DN40 (1,5") DIN 32676 (ISO 2852)	
Surface characteristics Ra/Rz of the wetted parts		< 0.38 / -	
Fill fluid for pressure transmission		NEOBEE (food grade, FDA compliant)	
Diaphragm diameter	[mm]	34	
Displays / operating elements			
Display		Display unit	LED, green
		switching status	LED, yellow
		function display	alphanumeric display, 4-digit
		measured values	alphanumeric display, 4-digit
Display unit		bar; psi; kPa; % of the span	
Remarks			
Pack quantity		1 pcs.	

PI2205

Flush pressure sensor with display

PI-004-REZ01-MFRKG/US/ /P

Electrical connection

Connector: 1 x M12; coding: A; Contacts: gold-plated



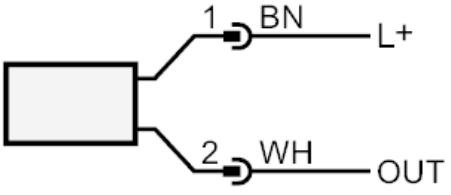

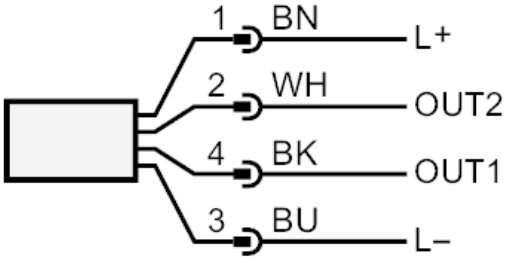

	connection for 2-wire operation :
OUT	analogue output
	connection for 3-wire operation :
OUT1	switching output
	IO-Link
OUT2	switching output
	analogue output
	colours to DIN EN 60947-5-2
	Core colours :
BK =	black
BN =	brown
BU =	blue
WH =	white