# LineLIGHT Fusion 1150 24V RGB Clip A



**Part No.: 300.100.50**

| MECHANICAL DATA | |
|---|---|
| Length | 1195 mm |
| Width | 33 mm |
| Height | 23 mm |
| Materials | Aluminium<br>PC<br>Stainless steel |
| Dome colour | Tranclucent |
| Housing colour | Black |
| Protection category | IP54<br>IP65 |
| Connection | M12 plug 5-pole |
| Type of fixing | Built-in mounting |
| Working temperature minimum | -30°C |
| Working temperature maximum | +50°C |
| Weight with packaging | 1168 g |
| Product weight | 987 g |
| Min. Tightening torque | 0.3Nm |
| Max. Tightening torque | 0.6Nm |

| ELECTRICAL DATA | |
|---|---|
| Operating voltage | 24V |
| Operating voltage type | DC |
| Operating voltage tolerance | +/- 10% |
| Rated operational voltage | 24 VDC |
| Rated operational current | 675 mA |
| Protection class | Protection class 3 |
| Pollution degree | 3<br>In the connection area: 2 |
| Overvoltage category | I |

| OPTICAL DATA | |
|---|---|
| Light source | LED |
| Light colour | MC 7 colours |
| Optical signal image | Permanent |
| Length illuminated area (mm) | 1150 |
| Service life optical | 50,000 h maximum |

| ACOUSTIC DATA | |
|---|---|
| Volume (max) at 1m distance | 85,0 dB(A) |
| Acoustic signal image | Pulse tone |

! For additional installation and mounting information, refer to the appropriate user guide at www.werma.com. This printed copy is for information only and is subject to alteration.

# LineLIGHT Fusion 1150 24V RGB Clip A

| | |
|---|---|
| Number of tones | 1 tone |
| Audio frequency | 3850 Hz |
| Acoustic service life | 5,000 h minimum |

| **APPROVAL DATA** | |
|---|---|
| Conforms with CE | Yes |
| Conforms with RoHS directive | Yes |
| WEEE | Yes |
| Conforms with RED directive | No |
| Conforms with ATEX-directive | No |
| Conforms with CCC-Ex | No |
| Conforms with CCC | No |
| Conforms with UL | No |
| Conforms with FCC | No |
| Conforms with IC | No |
| EAC certificate available | No |
| Conforms with UKCA (Importer) | Yes (WERMA (UK) Ltd.) |
| Conforms with CMIM | No |
| Conforms with AS-I | No |
| Conforms with DNV | No |
| Conforms with RoHS CN | 10 years |
| Conforms with VdS | No |

! For additional installation and mounting information, refer to the appropriate user guide at www.werma.com. This printed copy is for information only and is subject to alteration.

# LineLIGHT Fusion 1150 24V RGB Clip A

## DRAWING

Unit:mm

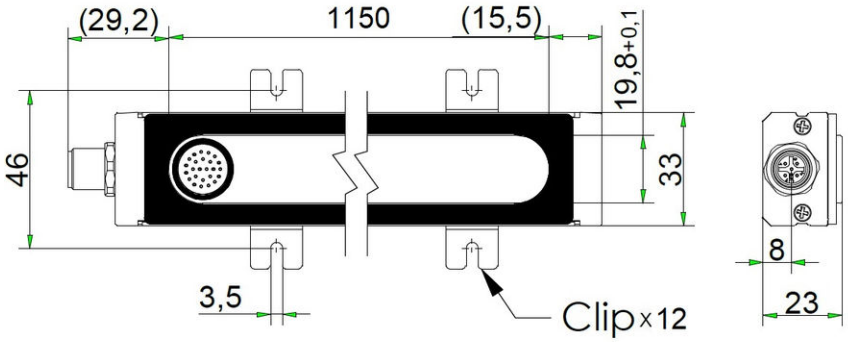


**Mounting Diagram_Clip**

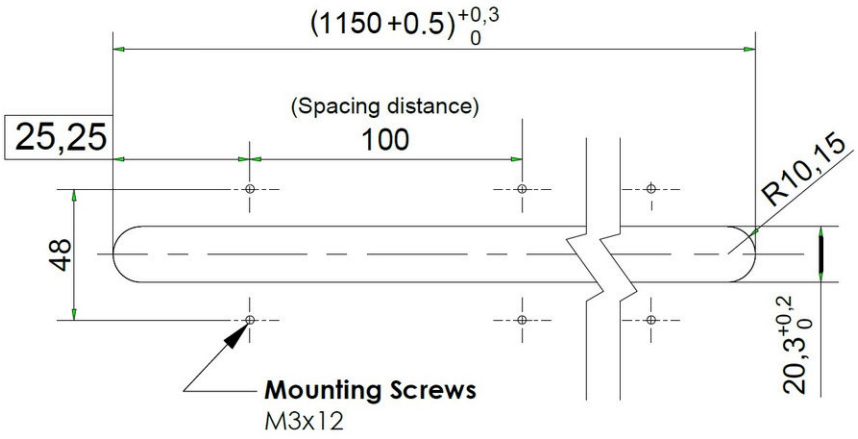


If IP65 is not needed,
the amount of **Clip** can be Reduced.
And **Spacing distance** can user-defined.

! For additional installation and mounting information, refer to the appropriate user guide at www.werma.com. This printed copy is for information only and is subject to alteration.