E30422

Label tags

TAG CLIP

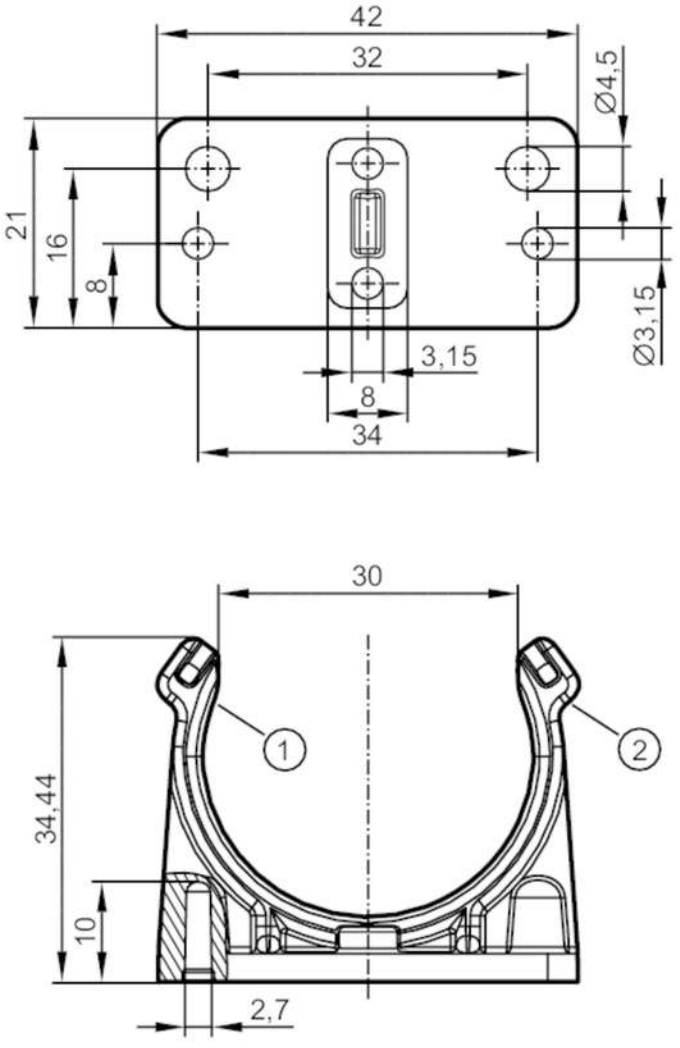

1 spring (slot on sensor)
2 locator for cable tie

Application		
Design		for fluid sensors
Mechanical data		
Weight	[g]	9.3
Dimensions	[mm]	21 x 42 x 34.44
Inside diameter	[mm]	30
Materials		PA
Accessories		
Items supplied		recess self-tapping screws : 2 x 3 mm
Remarks		
Remarks		can be secured with cable tie
Pack quantity		1 pcs.