Heavy-Duty Beacons / LED Rotating Beacon

LED Rotating Beacon BM 24VDC YE



Part No.: 839.320.55

MECHANICAL DATA	
Height	189 mm
Diameter	153 mm
Materials	Aluminium PC
Dome colour	Yellow
Housing colour	Black
Protection category	IP66 IP67
Connection	Screw terminals
cross-sectional area maximum	1,50mm² / 16AWG
Cable entry	Screwed cable gland
Cable entry minimum	d = 6 mm
Cable entry maximum	d = 13 mm
Tension relief	Present (conforms to VDE)
Type of fixing	Base mounting
Working temperature minimum	-30°C
Working temperature maximum	+50°C
Weight with packaging	1378 g
Product weight	1228 g

ELECTRICAL DATA	
Operating voltage	24V
Operating voltage type	DC
Operating voltage tolerance	+/- 10%
Rated operational voltage	24 VDC
Rated operational current	150 mA
Rated inrush current	500 mA
Protection class	Protection class 1
Pollution degree	3

OPTICAL DATA	
Light source	LED
Light colour	Yellow
Optical signal image	Revolving
Service life optical	50,000 h maximum
Rotation speed (rpm)	180 U/min

APPROVAL DATA	
Conforms with CE	Yes
WEEE	Yes

! For additional installation and mounting information, refer to the appropriate user guide at www.werma.com. This printed copy is for information only and is subject to alteration.

Heavy-Duty Beacons / LED Rotating Beacon

LED Rotating Beacon BM 24VDC YE

Conforms with ATEX-directive	No
Conforms with CCC	No
Conforms with UL	No
Conforms with FCC	No
Conforms with IC	No
EAC certificate available	Yes
Conforms with UKCA (Importer)	Yes (WERMA (UK) Ltd.)
Conforms with AS-I	No
ICAO Certification	No
Conforms with DNV	No
Conforms with RoHS CN	No
Conforms with VdS	No

DRAWING

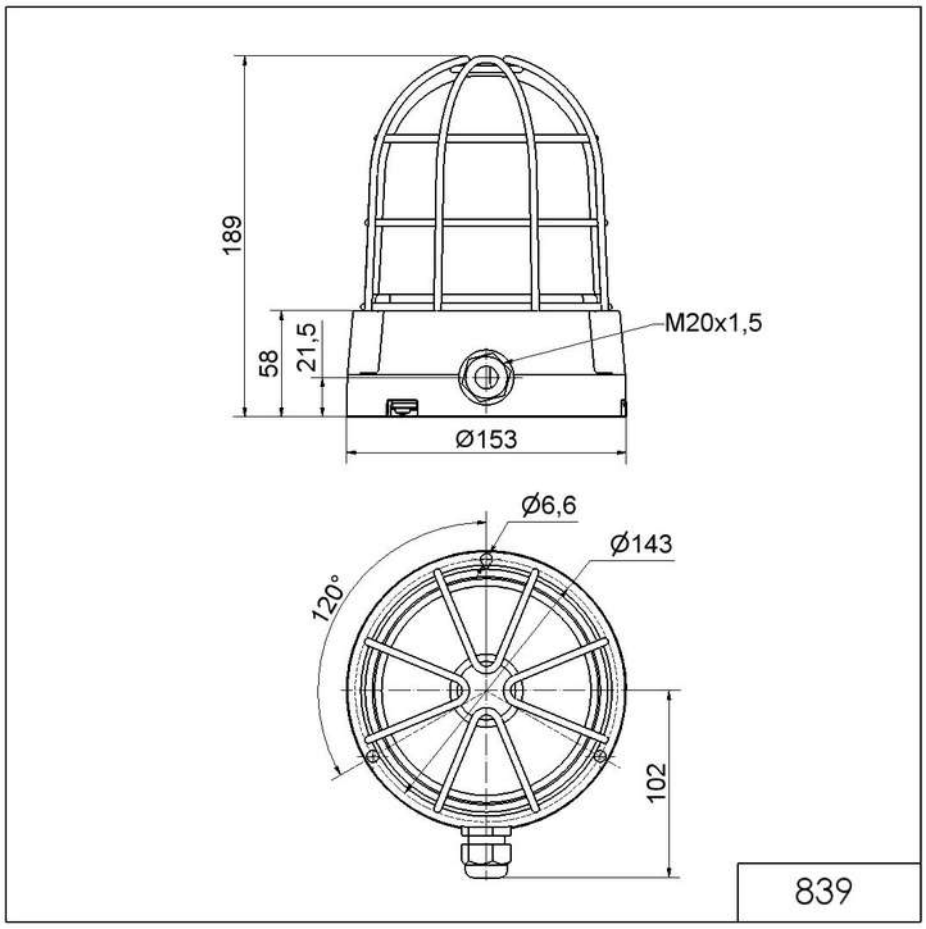

! For additional installation and mounting information, refer to the appropriate user guide at www.werma.com. This printed copy is for information only and is subject to alteration.