Brand of NTN corporation

Technical data

UCFCE211

Bearing units



Grey cast housing, radial insert ball bearing with socket set screws,seal with slinger

KIT CONTENT

UC211G2, FCE211

VISUAL (S)

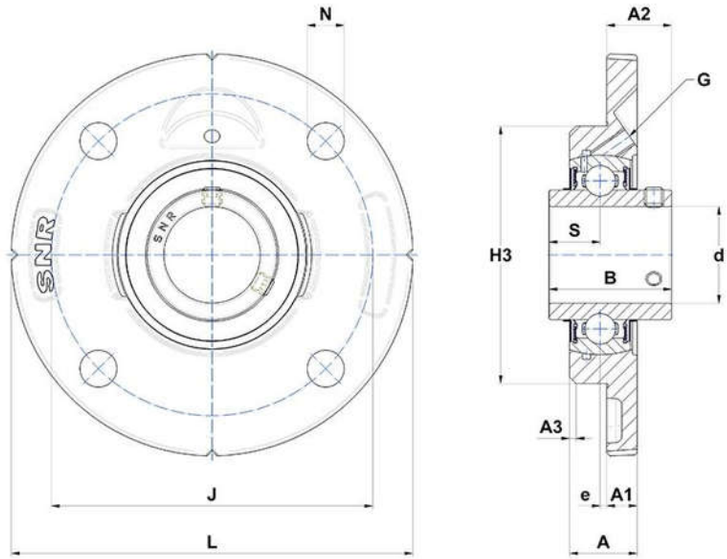

PRODUCT DEFINITION

Brand	SNR
A - Housing height	27,5 mm
A1 - Housing foot height / flange height	15 mm
A2 - Total height from mounting surface	33,4 mm
A3 - Centering depth / chamfer dimension	3 mm
B - Width of Inner Ring	55,6 mm

NTN Europe
1 rue des Usines · BP 2017 · 74010 Annecy Cedex · France · Tel. +33 (0)4 50 65 30 00
S.A. au capital de 322 639 919 € · RCS ANNECY B 325 821 072 · Id. Fiscale : FR 48 325 821 072
SIRET 325 821 072 00015 · Code APE 2815 Z · Code NACE 28.15

PRODUCT DEFINITION	
d - Shaft diameter	55 mm
G - Grease fitting	M6x1
H3 - Centering dia	125 mm
J - Mounting holes distance	150 mm
L - Housing width / diameter	185 mm
N - Mounting hole dimension	18 mm
S - Distance front side/bearing centre	22,2 mm

PRODUCT PERFORMANCE	
C - Dynamic load rating	43550000 mN
C0 - Static load rating	29200000 mN
Operating temperature min.	253,15 °K
Operating temperature max.	373,15 °K

OTHER FEATURES	
Mass	3,13 kg
Recommended tightening torque for set screw	22 N-m