MINISTART
Softstarter
BA 9010, BN 9011

0223494



- Increases the life of squirrel cage motors and mechanical drives
- Easily fitted to existing installations
- 1 phase control
- For motors up to 5,5 kW (BA 9010) and to 11 kW (BN 9011)
- Semiconductors bridged after softstart
- Adjustable ramp time and starting torque
- LED indication
- DIN-rail mounting
- BA 9010: width 45 mm
  BN 9011: width 100 mm

Function Diagram

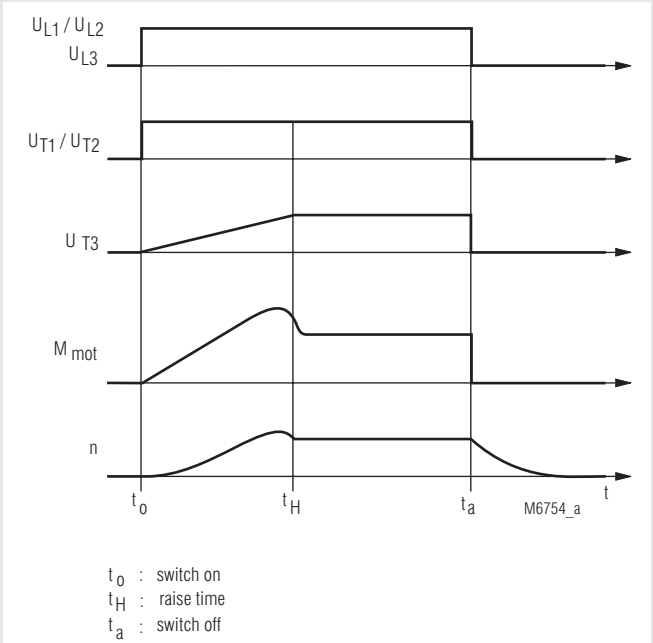

t_o : switch on
t_H : raise time
t_a : switch off

Block Diagram

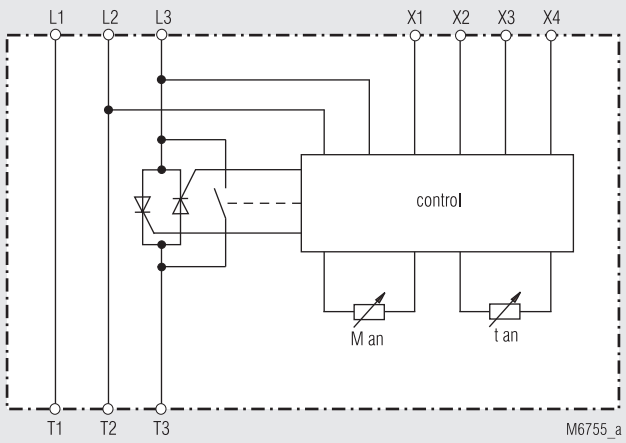

Approvals and Marking

CE

Applications

- Motor with gears, belt or chain drive
- Fans, pumps, conveyor systems, compressors
- Door drives, packaging machines
- Start current limiting on single phase motors

Function

Softstarters are electronic devices designed to enable 1-phase or 3-phase induction motors to start smoothly. BA 9010 / BN 9011 slowly ramps up the current on one phase, therefore allowing the motor torque to build up slowly. This reduces the mechanical stress on the machine and prevents damage to conveyed material.
When the motor is up to full speed the semiconductors in BA 9010 / BN 9011 are bridged to prevent internal power losses an heat build up.

Indication

LED green	ON	=	power connected
LED yellow	ON	=	softstart complete

Principle of Operation

For direct on line or star delta applications at 400 V, terminals L1, L2, L3 are connected to the mains contactor, terminals X3, X4 should be bridged and the motor connected to terminals T1, T2, T3. As soon as power is connected to terminals L1, L2, L3 the softstart will commence. Potentiometer "t_{an}" (0,5 - 5 sec.) adjusts the ramp time (time the motor takes to get fo full speed) and potentiometer "M_{an}" adjusts the start voltage (0 - 70 % nomV). When the softstart is complete the internal semiconductor is automatically bridged.

Notes

When using BA 9010 / BN 9011 on 230 V 3-phase motors the power rating of the unit must be reduced, i.e. BA 9010 3 kW at 400 V would be rated 1,5 kW at 230 V. To allow softstarting the motor load must always be connected as continuous operation of the softstart with no load may cause overheating of the motor and softstart.
It is recommended that the softstart is protected by superfast semiconductor fuses rated as per the current rating of the softstart or motor. However, standard line and motor protection is acceptable, but for high starting frequencies motor winding temperture monitoring is recommended.

All technical data in this list relate to the state at the moment of edition. We reserve the right for technical improvements and changes at any time.

Technical Data

Model:	BA 9010		BN 9011	
Nominal voltage:	3 AC 230 / 400 V			
Voltage range:	160 ... 240 V ± 10 %			
	380 ... 480 V ± 10 %			
Nominal frequency:	50 / 60 Hz			
Nominal motor power P_N at				
400 V:	3 kW	5,5 kW	7,5 kW	11 kW
230 V:	1,5 kW	3 kW	4 kW	5,5 kW
Min. motor power:	approx. 10 % of rated motor power			
Start torque:	0 ... 70 %			
Ramp time:	0,5 ... 5 s			
Recovery time:	200 ms			
Switching frequency:	100/h	80/h	50/h	30/h
Power consumption:	1,5 VA	3,5 VA	3,5 VA	3,5 VA
Operating temperature:	0 ... + 45 °C			
Storing temperature:	- 25 ... + 75 °C			
Protection class:	IP 30		IEC/EN 60 529	
Wire connection:	up to 2,5 mm² stranded ferruled			
Mounting:	DIN-rail mounting			
Weigth:	300 g	300 g	500 g	500 g

Dimensions

Width x height x depth:

BA 9010:	45 x 74 x 121 mm
BN 9011:	100 x 74 x 121 mm

Standard Type

BA 9010 3 AC 230 V / 400 V 50/60 Hz 1,5 kW / 3 kW
Article number: 0045241 stock item

- Nominal voltage: 3 AC 230 V / 400 V
- Nominal motor power: 1,5 kW / 3 kW
- Width: 45 mm

Ordering Example

BN 9011 AC 230 / 400 V 50/60 Hz 3 / 5,5 kW

- 3 / 5,5 kW — Nominal motor power
- 50/60 Hz — Nominal frequency
- AC 230 / 400 V — Nominal voltage
- BN 9011 — Type

Installation

These units must be mounted on a vertical mounting area with the connections in a vertical plane, i.e. top to bottom. Ensure that no external heat source is placed below the unit and a 40 mm air gap is maintained above and below. Other devices may be directly mounted either side of the unit.

Control Input

To operate the device at AC 230 V it's necessary to bridge the terminals X1, X2. For change pole motor applications the terminals X3, X4 have to be connected via a contact. Otherwise they have to be bridged.

Setup Procedure

1. Set potentiometer "M_{an}" to minimum (fully anti-clockwise)
   Set potentiometer "t_{an}" to maximum (fully clockwise)
2. Start the motor and turn potentiometer "M_{an}" up until the motor starts to turn without excessive humming. Stop the motor and restart.
3. Adjust potentiometer "t_{an}" to give the desired ramp time.
   Stop and restart the motor, readjusting the potentiometers until the desired starting characteristics are achieved.

- **Attention:** If the ramp-up time is adjusted to short, the internal bridging contact closes before the motor is on full speed. This may damage the bridging contactor or bridging relay.

Safety Instruction

- Never clear a fault when the device is switched on
- The user must ensure that the device and the necessary components are mounted and connected according to the locally applicable regulations and technical standards.
- Adjustments may only be carried out by qualified specialist staff and the applicable safety rules must be observed.

Application Examples

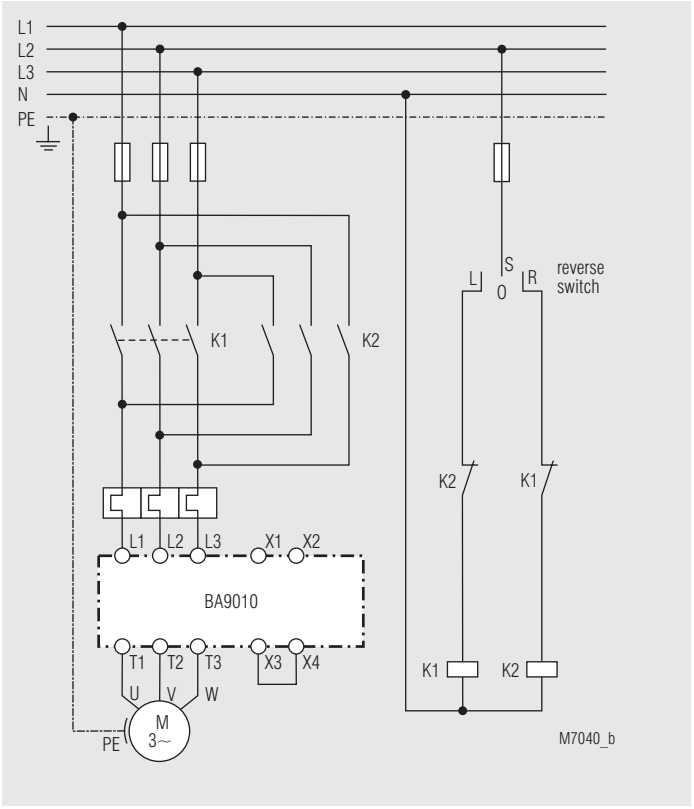

BA 9010 connected to a 3 phase induction motor with reversing

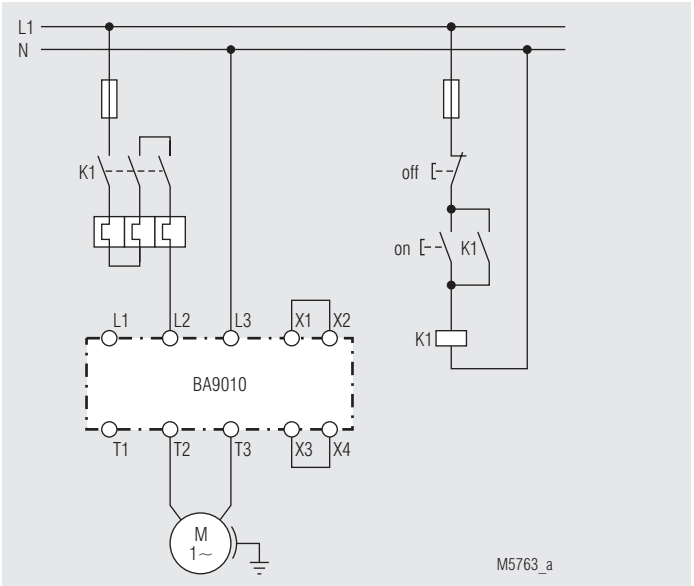

Softstart of a single phase motor on 230 V AC supply

Application Example

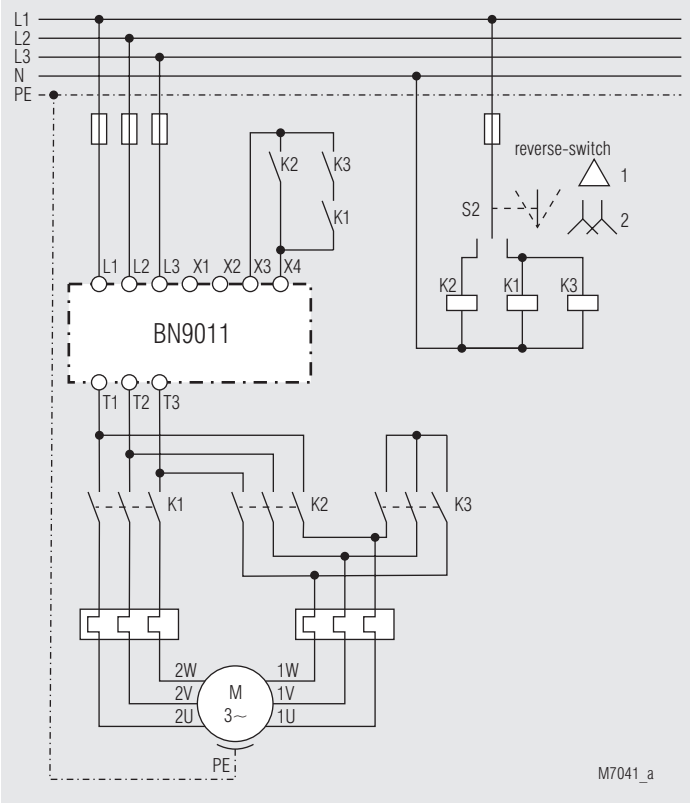

BN 9011 connected to a 3 phase multi-pole (Dahlander) motor with reversing