E37930

Thermowell for temperature sensors

THERMOWELL, D6/2"CLAMP/L=230

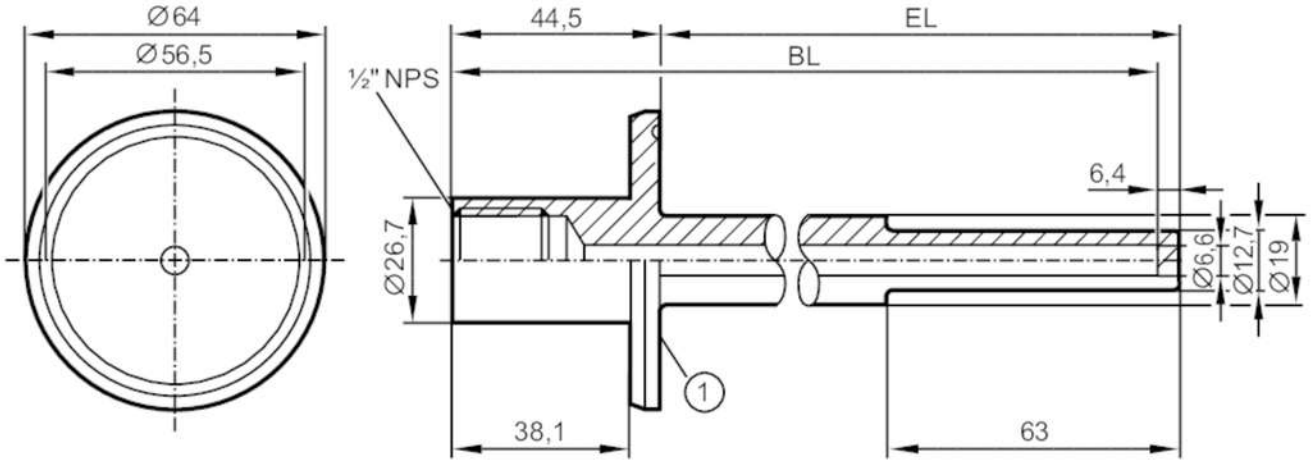

1 Clamp 2" ISO 2852

EC 1935/2004 EHEDG Certified FDA

Application		
Design		for temperature sensors EL = 300 mm
Pressure rating	[bar]	25
Mechanical data		
Weight	[g]	545
Materials		stainless steel (1.4404 / 316L)
Sensor connection		1/2" NPS Ø 6 mm suitable for G1/2 and 1/2" NPT
Process connection		Clamp DN50 (2") DIN 32676 (ISO 2852)
Surface characteristics Ra/Rz of the wetted parts		≤ 0.6 / -
Installation length EL	[mm]	191
Bore length BL	[mm]	228.6
Remarks		
Pack quantity		1 pcs.