E30530

G1 ASEPTOFLEX VARIO leak test

LEAKTEST G1 ASEPTOFLEX VARIO

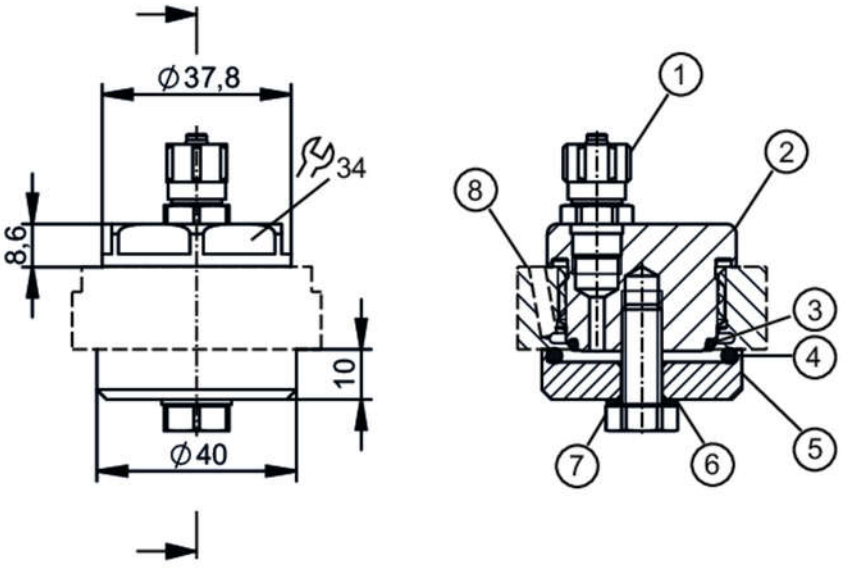

1 quick connector CK-1/8-PK-4 (2027)
2 end cap G1
3 O-ring 24.0x2.0 EPDM
4 O-ring 32.0x3.0 NBR
5 seal washer G1
6 Gasket stainless steel (1.4305 / 303) / NBR
7 socket head cap screw DIN EN ISO 4017 - M8x20
8 Adapter not supplied

Application		
Design		leak test for Aseptoflex Vario welding adapters
Application		leak test after welding and, if necessary, grinding process
Pressure rating	[bar]	10
Mechanical data		
Weight	[g]	290.4
Materials		stainless steel (1.4305 / 303); Al; EPDM; NBR
Process connection		G 1 Aseptoflex Vario
Remarks		
Pack quantity		1 pcs.