Timers - Star Delta start-up

K3ZS20

KAPPA series

4 Time ranges (Start-up time)

Zoom voltage

2 change over contacts

Plug-in housing

Width 38mm



Read and understand these instructions before installing, operating or maintaining the equipment.

Danger!
Never carry out work on live parts! Danger of fatal injury! The product must not be used in case of obvious damage. To be installed by an authorized person.

Technical data

1. Functions

S Start-Delta start-up

2. Time ranges

Start-up time

Time range	Adjustment range	
10s	500ms	10s
30s	1500ms	30s
1min	3s	1min
3min	9s	3min

Transit time (fixed)

40ms
60ms
80ms
100ms

3. Indicators

Green LED U/t ON:	indication of supply voltage delta-contactor in on-position (pins S11-S9)
Green LED U/t flashes:	indication of time period - start-up time
Yellow LED ON/OFF:	indication of star-conductor (pins S1-S3)

4. Mechanical design

Self-extinguishing plastic housing, IP rating IP40
Mounted on screw terminal socket 11-pols in accordance with IEC 60067-1-18a (type R11X or ES12)
Mounting position: any

5. Input circuit

Supply voltage:	12 to 240V a.c./d.c.
Pins:	S2(+)-S10 / A1(+)-A2
Tolerance:	-10% to +10%
Rated consumption:	6VA (2W)
Rated frequency:	a.c. 48 to 63Hz
Duty cycle:	100%
Reset time:	100ms
Residual ripple to d.c.:	10%
Drop-out voltage:	>30% of the supply voltage
Overvoltage category:	III (in accordance with IEC 60664-1)
Rated surge voltage:	4kV

6. Output circuit

2 potential free change over contacts

Rated voltage:	250V a.c.
Switching capacity:	2000VA (8A / 250V)
Fusing:	8A fast acting
Mechanical life:	20 x 10^6 operations
Electrical life:	2 x 10^5 operations at 1000VA resistive load
Switching frequency:	max. 6/min at 1000VA resistive load (in accordance with IEC 60947-5-1)
Overvoltage category:	III (in accordance with IEC 60664-1)
Rated surge voltage:	4kV

7. Accuracy

Base accuracy:	±1% of minimum scale value
Adjustment accuracy:	<5% of minimum scale value
Repetition accuracy:	<0.5% or ±5ms
Voltage influence:	-
Temperature influence:	≤0.01% / °C

8. Ambient conditions

Ambient temperature:	-25 to +55°C
Storage temperature:	-25 to +70°C
Transport temperature:	-25 to +70°C
Relative humidity:	15% to 85% (in accordance with IEC 60721-3-3 class 3K3)
Pollution degree:	2 (in accordance with IEC 60664-1)

Functions

Star-Delta start-up
When the supply voltage U is applied, the star-contact switches into on-position (yellow LED illuminated) and the set star-time t1 begins (green LED U/t flashes). After the interval t1 has expired (green LED U/t illuminated) the star-contact switches into off-position (yellow LED not illuminated) and the set transit-time t2 begins. After the interval t2 has expired the contact for the delta-contactor switches into on-position. To restart the function the supply voltage must be interrupted and reapplied.

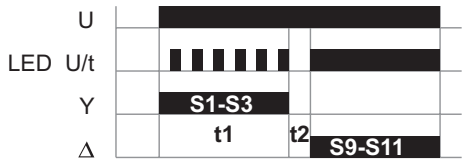

Connections

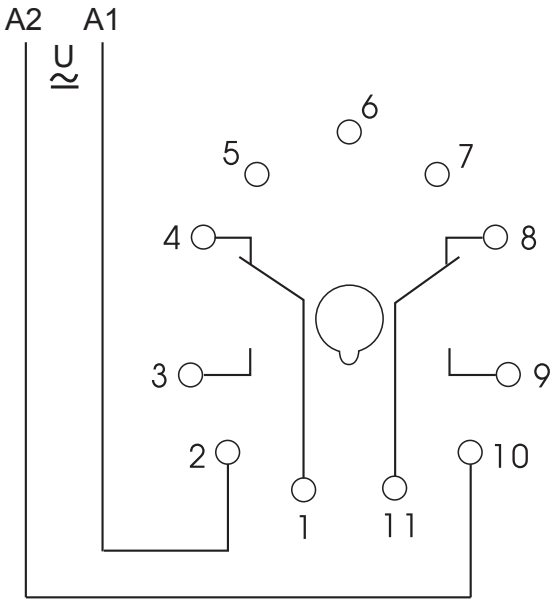

Dimensions

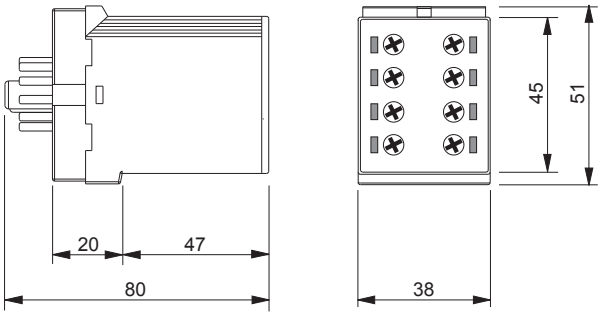

Ordering information

Type	Functions	Supply Voltage	Part. No.
K3ZS20 12-240V AC/DC	S (Star-Delta) start up	12-240V a.c./d.c.	135300