Enclosed Motor Starters

Installation and Commissioning Instructions

This document applies to following Moeller Electric Motor Starters:

Motor Starter (with Isolator)	Enclosure Material	AC-3 400V Rating				
		≤4kW	5.5kW	7.5kW	11kW	15kW
Direct-on-Line	Insulated	XD(P)4/I (*,*)	XD(P)5.5/I (*,*)	XD(P)7.5/I (*,*)	XD(P)11/I (*,*)	
	Steel	XD(P)4/ST (*,*)	XD(P)5.5/ST (*,*)	XD(P)7.5/ST (*,*)	XD(P)11/ST (*,*)	
	Stainless Steel	XD(P)4/SS (*,*)	XD(P)5.5/SS (*,*)	XD(P)7.5/SS (*,*)	XD(P)11/SS (*,*)	
Reversing Direct-on-Line	Insulated	XDR(P)4/I (*,*)	XDR(P)5.5/I (*,*)	XDR(P)7.5/I (*,*)		
	Steel	XDR(P)4/ST (*,*)	XDR(P)5.5/ST (*,*)	XDR(P)7.5/ST (*,*)		
	Stainless Steel	XDR(P)4/SS (*,*)	XDR(P)5.5/SS (*,*)	XDR(P)7.5/SS (*,*)		
Star-Delta	Insulated		XSD(P)5.5/I (*,*)	XSD(P)7.5/I (*,*)	XSD(P)11/I (*,*)	XSD(P)15/I (*,*)
	Steel		XSD(P)5.5/ST (*,*)	XSD(P)7.5/ST (*,*)	XSD(P)11/ST (*,*)	XSD(P)15/ST (*,*)
	Stainless Steel		XSD(P)5.5/SS (*,*)	XSD(P)7.5/SS (*,*)	XSD(P)11/SS (*,*)	XSD(P)15/SS (*,*)

Where (*,*) refers to the available coil voltage; either (230V 50Hz, 240V 60Hz) or (400V 50Hz, 440V 60Hz)
(P) refers to types with an Incoming Supply Isolator

IMPORTANT SAFETY INSTRUCTIONS – PLEASE READ

This product should be installed, commissioned and maintained by a competent person in accordance with these instructions, and the appropriate clauses of the current edition of the IEE Wiring Regulations (BS 7671).

It is essential that the mains electricity supply that will be, or is currently, connected to this product is isolated before commencing work.

All connections should be made to the product as instructed; field cables should not be stressed, and terminal screws should be fully tightened to the recommended torque values.

To avoid risk of fire, do not exceed the maximum rated current of this product.

Please ensure that these instructions are left with the person responsible for the future operation and maintenance of this product.

Notes Specific to Insulated Enclosures



Motor Starters supplied in insulated enclosures are “Totally Insulated” in accordance with BS EN 60439-1:1999.

The insulating material that therefore encapsulates all the electrical apparatus must not be pierced by conducting parts such as metal screws, conduit, cable glands, etc. (See BS7671. IEE Regs. 413-03)

The metal mounting plate and other exposed conductive parts within the enclosure are therefore not earthed.

For conduit entry, insulated conduit fittings must be used for attaching plastic or metal conduit to the enclosure, thus avoiding metallic penetration of the enclosure wall.

Where cable entry to the Motor Starter is required to be via metal trunking, this shall be done by insulated conduit fittings. Alternatively, where the enclosure is to be butted up to the trunking, an opening should be cut into the wall of the trunking to clear the insulated grommets or glands that must be fitted to the enclosure openings (knockouts). The enclosure must not be attached to the trunking itself unless screws of insulating materials are used.

Motor Starters supplied in insulated enclosures with transparent polycarbonate lids are recommended to be occasionally cleaned with an anti-static cleaning cream/polish; on no account should these covers be cleaned with any chemical solvent, such as trichlorethylene, acetone, varnish thinner or liquid fuel.

These products are supplied without an Overload Relay.
An Overload Relay must be fitted and wired to the Contactor Q11 and the flying leads terminated, as indicated elsewhere in this document, before the starter is put into service.
DANGER OF DEATH exists if this instruction is not followed.

Motor Starter Circuit Diagrams

One of these circuit diagrams will apply to this Motor Starter; please note that hatched areas represent the installation of, and final control circuit connections to, the Overload Relay which is available separately. The dotted box around Q1 represents when the starter is fitted with an Incoming Supply Isolator (XDP4… for example). When the Incoming Supply Isolator (Q1) is omitted the Incoming Supply Cables are connected directly onto Q11 terminals 1, 3, 5, E & N (when applicable to Ph-N control).

Applicable to:

XD(P)4 / 5.5 / 7.5 / 11

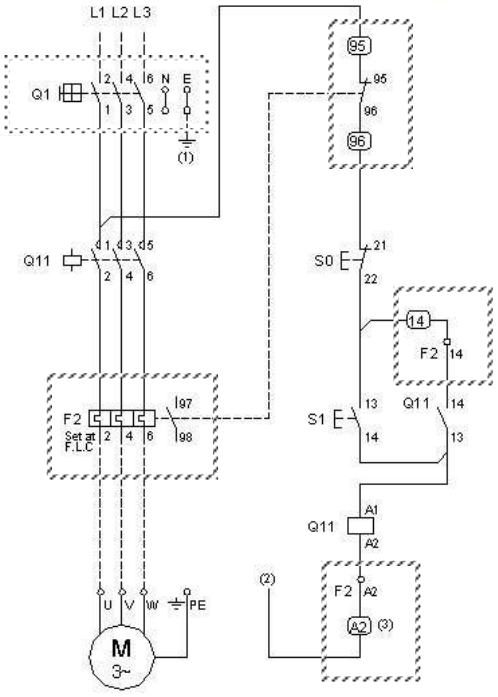

Applicable to:

XDR(P)4 / 5.5 / 7.5

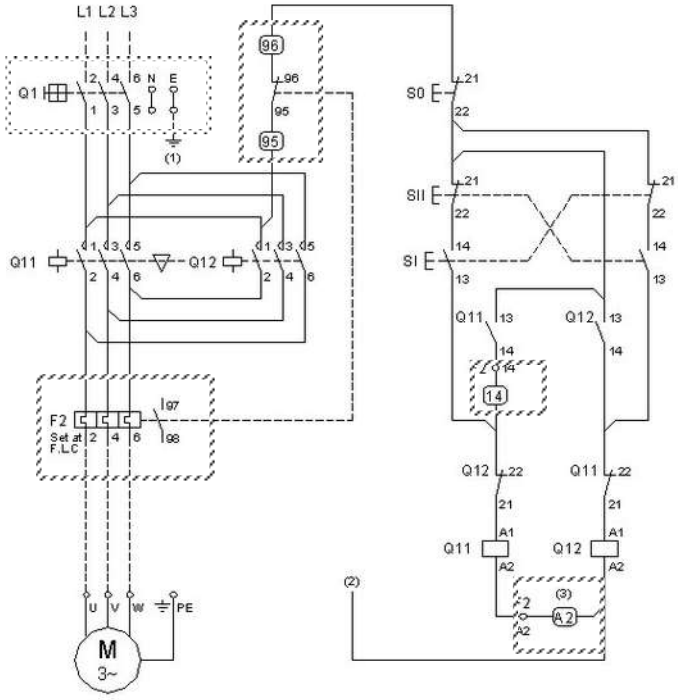

Applicable to:

XSD(P)5.5 / 7.5 / 11 / 15

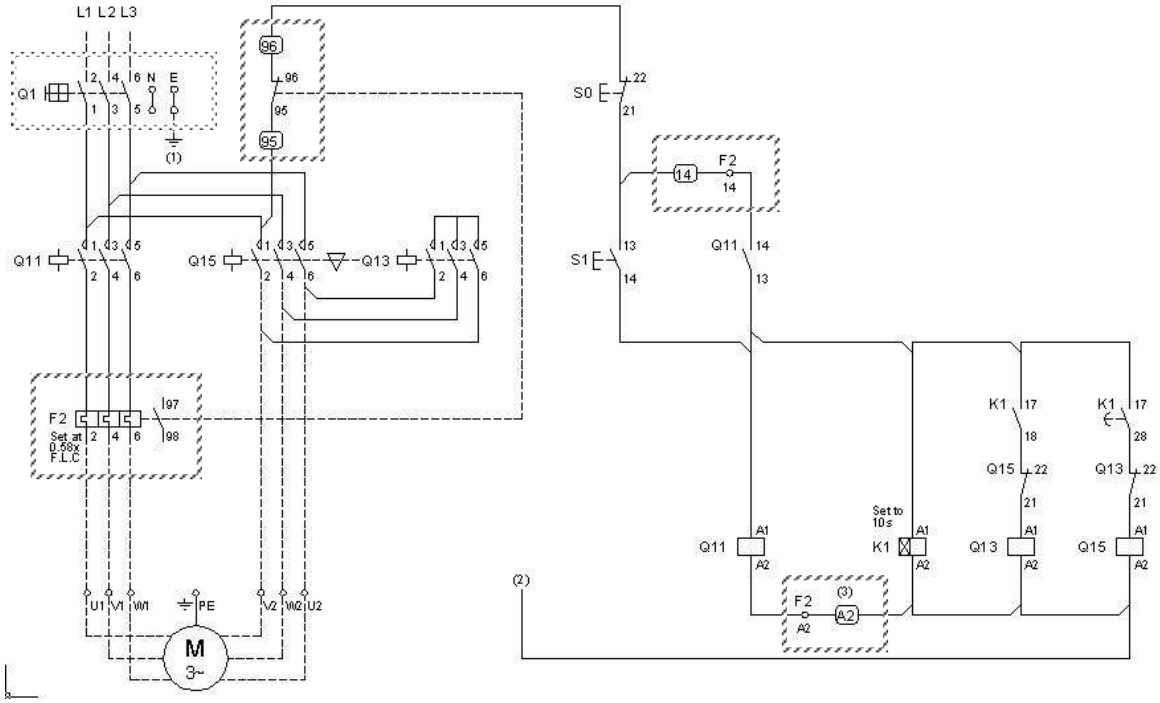

Key to Notes:

(1) Earth stud is bonded on metal enclosures only.
(2) Factory connection to 'N' on Q1 for 230V Ph-N control supply (X...P… types), N Terminal on X… types without Main Isolator. For 400V Ph–Ph control supply, '5' on Q11 for XD… types, '5' on Q12 for XDR… types and '5' on Q15 for XSD… types.
(3) Factory cable tail for terminal 'A2' on Overload Relay F2 is only applicable to ZB12 type Overload Relays.

Final Control Cable Connections to Overload Relay

This Motor Starter is not fitted with an Overload Relay at the factory, and therefore the control circuit is not complete. Once an Overload Relay has been installed, the factory cable tails should be terminated according to the appropriate diagram below.

Applicable to:

XD(P)4
XD(P)5.5
XD(P)7.5

XDR(P)4
XDR(P)5.5
XDR(P)7.5

XSD(P)5.5
XSD(P)7.5
XSD(P)11

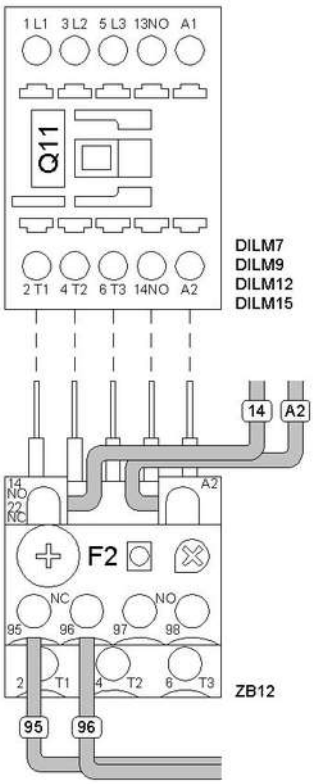

Applicable to:

XD(P)11

XSD(P)15

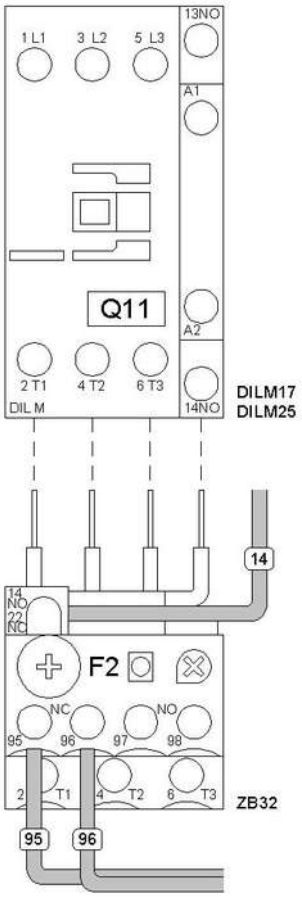

Selection and Setting of Overload Relay

All Overload Relays have an adjustment dial (yellow in colour) marked with the range of motor full load current that can be accommodated by that particular size of relay. The dial should be turned so that the full load current of the motor (obtained from the motor rating label) lines up with the pointer below the dial. Note that for star-delta motor starters (XSD…), where the overload is connected in the motor supply cables, the dial should be set to 0.58 x FLC see table below.

The Overload Relay is supplied set to manual reset operation (H). To obtain automatic reset operation (A), depress and rotate the Hand/Auto plunger (blue in colour) anti-clockwise to the 'A' position. The 'A' position should not be used with 2-wire control.

Starter Type	Starter Rating	Typical FLC @400V	Overload Relay	Setting Range	Typical Setting
XD(P)4 / XDR(P)4	0.37kW	1.1A	ZB12-1,6	1-1.6A	1.1A
XD(P)4 / XDR(P)4	0.55kW	1.5A	ZB12-1,6	1-1.6A	1.5A
XD(P)4 / XDR(P)4	0.75kW	1.9A	ZB12-2,4	1.6-2.4A	1.9A
XD(P)4 / XDR(P)4	1.1kW	2.6A	ZB12-4	2.4-4A	2.6A
XD(P)4 / XDR(P)4	1.5kW	3.6A	ZB12-4	2.4-4A	3.6A
XD(P)4 / XDR(P)4	2.2kW	5A	ZB12-6	4-6A	5A
XD(P)4 / XDR(P)4	3kW	6.6A	ZB12-10	6-10A	6.6A
XD(P)4 / XDR(P)4	4kW	8.5A	ZB12-10	6-10A	8.5A
XD(P)5.5 / XDR(P)5.5	5.5kW	11.3A	ZB12-12	9-12A	11.3A
XD(P)7.5 / XDR(P)7.5	7.5kW	15.2A	ZB12-16	10-16A	15.2A
XD(P)11	11kW	21.7A	ZB32-24	16-24A	21.7A
XSD(P)5.5	5.5kW	11.3A	ZB12-10	6-10A	6.6A
XSD(P)7.5	7.5kW	15.2A	ZB12-10	6-10A	8.8A
XSD(P)11	11kW	21.7A	ZB12-16	10-16A	12.6A
XSD(P)15	15kW	29.3A	ZB32-24	16-24A	17A

Before Commissioning and Operation

All connections of current carrying parts are rated for any load likely to occur during operation and are secured against working loose in the factory. It is possible however that some connections can work loose due to vibrations experienced during shipment; therefore terminal screws on all devices, especially those in the main circuit, should be checked before commissioning.

Maintenance

Check that contactor(s) are free from dust and foreign bodies before energising motor starter. Never lubricate or grease contacts, sliding guides or magnet armatures.

Variations and alternative specifications

For alternative voltages and options please refer to Moeller Technical Support, who are also able to quote for the complete KeyBuild range of Starters, Distribution Boards and Custom Control Panels.

Direct sales ordering

Tel 01296 397400
Fax 01296 392413
Email sales@moeller.co.uk

Technical support

Tel 01296 310323
Fax 01296 392413
Email support@moeller.co.uk.

Moeller Electric Ltd
Gatehouse Close, Aylesbury, Bucks, HP19 8DH
Tel: 01296 393322 Fax: 01296 421854
www.moeller.co.uk

AWA-GB-21-120 (03/06)