6000-2Z

SKF Explorer

Dimensions

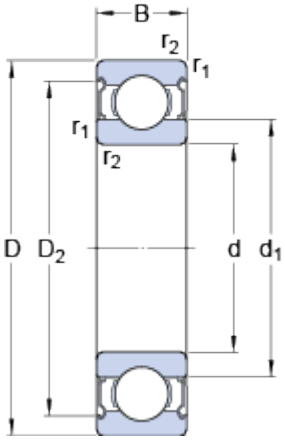

d		10	mm
D		26	mm
B		8	mm
d_1		14.8	mm
D_2		22.6	mm
$r_{1,2}$	min.	0.3	mm

Abutment dimensions

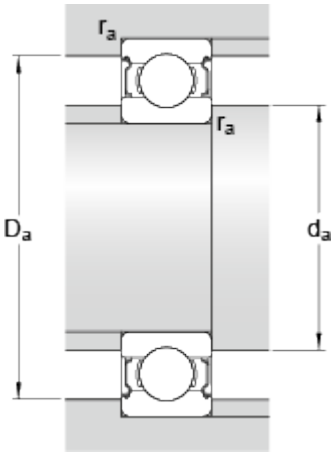

d_a	min.	12	mm
d_a	max.	14.7	mm
D_a	max.	24	mm
r_a	max.	0.3	mm

Calculation data

Basic dynamic load rating	C	4.8	kN
Basic static load rating	C_0	2	kN
Fatigue load limit	P_u	0.083	kN
Reference speed		67000	r/min
Limiting speed		34000	r/min
Calculation factor	k_r	0.025	
Calculation factor	f_0	12	

Mass

Mass bearing	0.0201	kg