Top View of Assembly

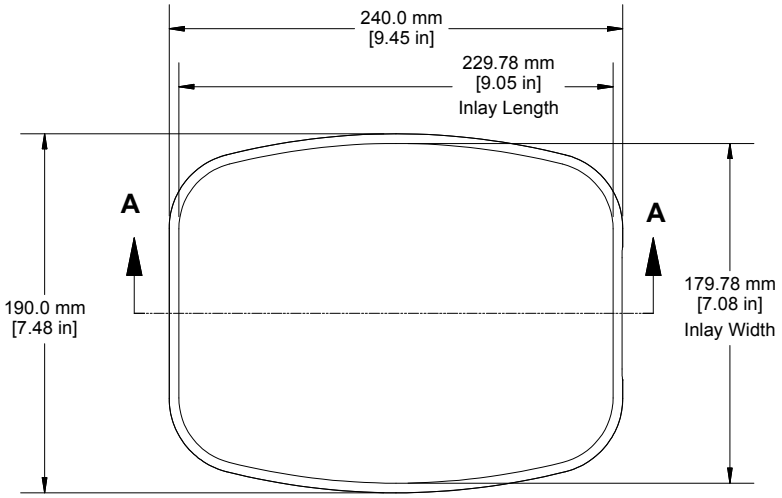

End View of Assembly

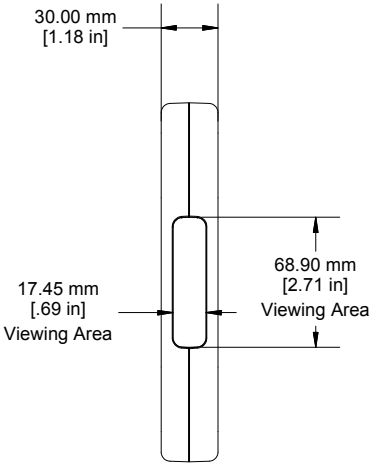

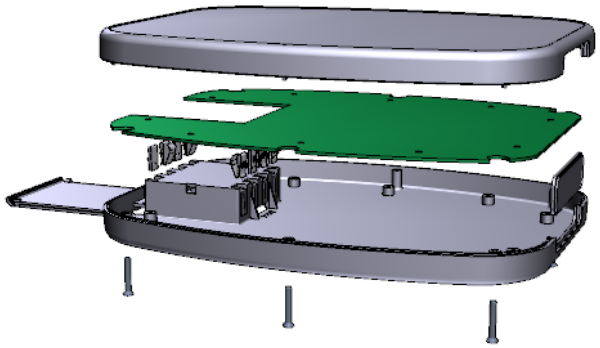

SECTION A-A
(Side View of Assembly)

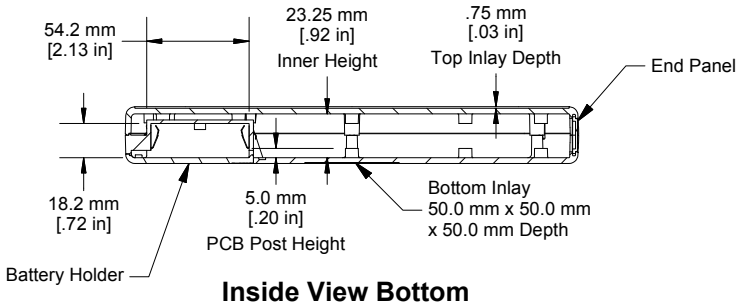

Removable Panel

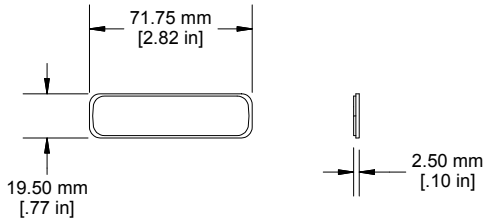

Inside View Bottom

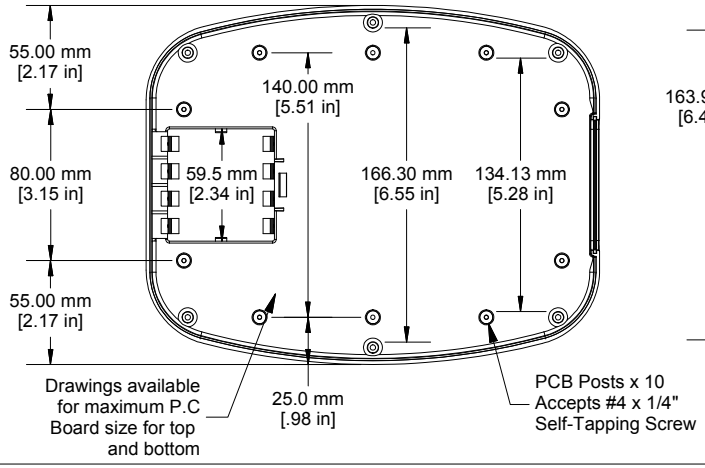

Inside View Top

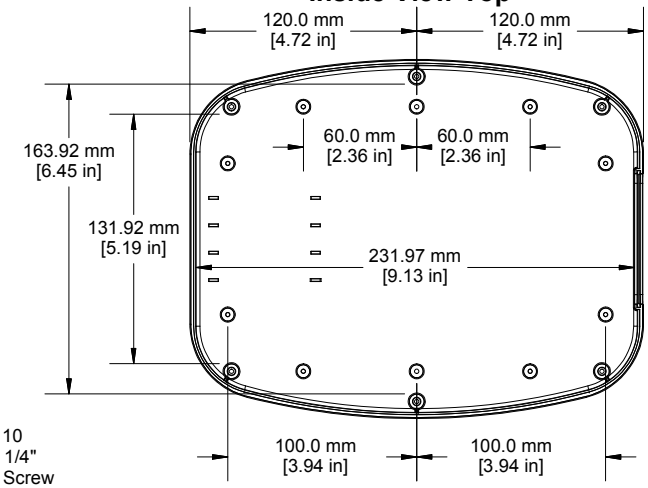

Enclosures can be Factory Modified (Milling, Drilling, Printing etc.)
Contact Factory mjm@hammondmfg.com for quotes
Solid models of this enclosure available in STEP or IGES.

NOTE	
Enclosure molded from FR ABS (UL94-V0) plastic.	
Purchased assembly includes top and bottom cover, 1 removable panel, battery door, battery spring clips (8 pcs), 9V adapter (2 pcs) and 6 cover screws (M3-0.5 x 18mm) . M3 Brass inserts are installed for cover screws. (P.C. Board not supplied)	

PART NUMBERS	
1599TABLBAT Enclosure	
Black Enclosure	1599TABLBKBAT
Grey Enclosure	1599TABLGYBAT
ACCESSORIES	
Replacement Cover Screws (Pkg 100)	1594MS100 (Silver) 1594MS100BK (Black)
P.C. Board Screws	1593ATS50 (Pkg 50) 1593ATS100 (Pkg 100)

HAMMOND MANUFACTURING™

1599TABLBAT

www.hammondmfg.com