E30403

Welding thermowell for temperature sensors

WELDING THERMOWELL G1/2 V4A

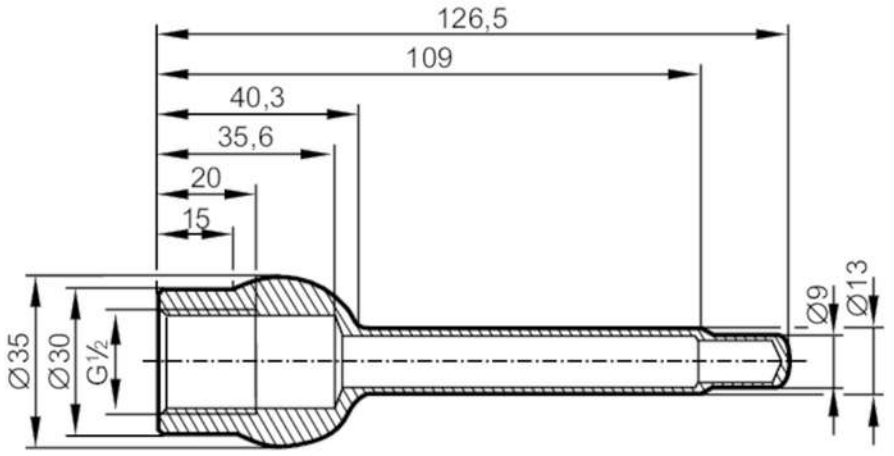

EC 1935/2004 EHEDG Certified FCM FDA

Application		
Design		for temperature sensors TA343x, TAA431, TAD191
Pressure rating	[bar]	160
Measuring/setting range		
Probe length L	[mm]	126.5
Mechanical data		
Weight	[g]	186.3
Materials		stainless steel (1.4404 / 316L)
Sensor connection		G 1/2 sealing cone Ø 8,2 mm
Process connection		Ø 35 mm
Surface characteristics Ra/Rz of the wetted parts		< 0.6
Remarks		
Pack quantity		1 pcs.