Type: LXPRC/S-4W

Phase Failure, Phase Sequence, Under and Over Voltage plus Time Delay

Terminal Protection to IP20



Dims: to DIN 43880
W. 17.5mm

- ❑ ***NEW* 17.5mm DIN rail housing**
- ❑ **Microprocessor based**
- ❑ **True R.M.S. monitoring**
- ❑ **Monitors own supply and detects if one or more phases exceed the set Under or Over voltage trip levels**
- ❑ **Measures phase to neutral voltages**
- ❑ **Detects incorrect phase sequence, phase loss and neutral loss**
- ❑ **Adjustments for Under and Over voltage trip levels**
- ❑ **Adjustment for Time delay (from an Under or Over voltage condition)**
- ❑ **1 x SPDT relay output 8A**
- ❑ **Green LED indication for supply status**
- ❑ **Red LED indication for relay status**

ISO 9001:2015
Cert. No. 14125771

FUNCTION DIAGRAM

Under and Over Voltage Monitoring

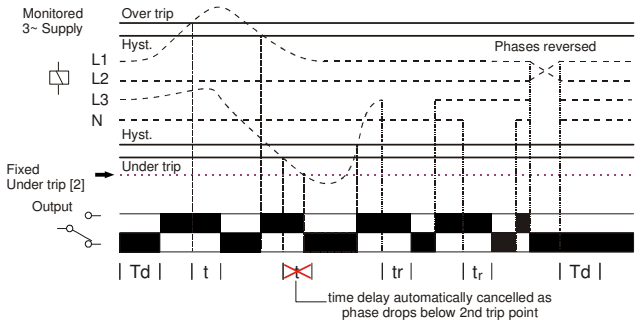

INSTALLATION AND SETTING

Installation work must be carried out by qualified personnel.

- BEFORE INSTALLATION, ISOLATE THE SUPPLY.
- Connect the unit as required. The Connection Diagram below shows a typical installation, whereby the supply to a load is being monitored by the Phase monitoring relay. If a fault should occur (i.e. fuse blowing), the relay will de-energise and assuming control of the external Contactor, de-energise the Contactor as well.

Applying power.

- Set the "Over %" ❸ adjustment to maximum and the "Under %" ❺ adjustment to minimum. Set the "Delay (t)" ❹ to minimum.
- Apply power and the green "Power supply" ❶ and red "Relay" ❷ LED's will illuminate, the relay will energise and contacts 15 and 18 will close. Refer to the troubleshooting table if the unit fails to operate correctly.

Setting the unit (with power applied).

- Set the "Over %" and the "Under %" adjustments to give the required monitoring range.
- If large supply variations are anticipated, the adjustments should be set further from the nominal voltage.
- Set the "Delay (t)" adjustment as required. (Note that the delay is only effective should the supply increase above or drop below the set trip levels. However, if during an under voltage condition the supply drops below the 2nd under voltage trip level, any set time delay is automatically cancelled and the relay de-energises).
  Note: If the supply voltage increases above the maximum "Over %" trip setting by approx. 5% or more, the relay will de-energise immediately.

Troubleshooting.

The table below shows the status of the unit during a fault condition.

Supply fault	Green LED	Red LED	Relay
Phase or neutral missing	On	Off	De-energised
Phases reversed (no delay)	Flashing	Off	De-energised
Under or Over Voltage condition (during timing)	On	Flashing	Energised for set delay (t)
Under or Over Voltage condition (after timing)	On	Off	De-energised
Phase below 70% of Un (fixed under trip level [2])	On	Off	De-energised

TECHNICAL SPECIFICATION

Supply/monitoring voltage			
Un* **(L1, L2, L3, N):**	120, 127, 220, 230, 240V AC (see note)		
Frequency range:	48 – 63Hz		
Supply variation:	70 – 130% Un		
Overvoltage category:	III (IEC 60664)		
Rated impulse withstand voltage:	4kV (1.2/50µS) IEC 60664		
Power consumption (max.):	6VA		
Monitoring mode:	Under and Over voltage		
Trip levels:			
Under [2]:	70% of Un (fixed) ± 2%		
Under:	75 – 95% of Un		
Over:	105 – 125% of Un		
Measuring ranges:	Under [2]	Under	Over
120V:	84V	90 – 114V	126 – 150V
127V:	89V	95 – 121V	133 – 159V
220V:	154V	165 – 209V	231 – 275V
230V:	161V	173 – 218V	241 – 288V
240V:	168V	180 – 228V	252 – 300V
Hysteresis:	≈ 2% of trip level (factory set)		
Setting accuracy:	± 3%		
Repeat accuracy:	± 0.5% at constant conditions		
Immunity from micro power cuts:	<50mS		
Response time:	≈ 50mS		
Time delay (t):	0.2 – 10 sec. (± 5%)		
	Note: actual delay (t) = adjustable delay + response time		
Delay from Phase/Neutral loss (tr):	≈ 150mS (worst case = tr x 2)		
Power on delay (Td):	≈ 1 sec. (worst case = Td x 2)		
Power on indication:	Green LED		
Relay status indication:	Red LED		
Ambient temp:	-20 to +60°C		
Relative humidity:	+95% max.		
Output **(15, 16, 18)**:	SPDT relay		
Output rating:	AC1	250V 8A (2000VA)	
	AC15	250V 5A (no), 3A (nc)	
	DC1	25V 8A (200W)	
Electrical life:	≥ 150,000 ops at rated load		
Dielectric voltage:	2kV AC (rms) IEC 60947-1		
Rated impulse withstand voltage:	4kV (1.2/50µS) IEC 60664		
Housing:	Orange flame retardant UL94		
Weight:	75g		
Mounting option:	On to 35mm symmetric DIN rail to BS EN 60715 or direct surface mounting via 2 x M3.5 or 4BA screws using the black clips provided on the rear of the unit.		
Terminal conductor size	≤ 2 x 2.5mm² solid or stranded		
Approvals:	Conforms to IEC.		

UL LISTED IND. CONT. EQ. E111187

CE, and RoHS Compliant.
EMC: Immunity: EN 61000-6-2 (EN 61000-4-3 15V/m 80MHz - 2.7GHz) Emissions: EN 61000-6-4

* Please state Supply/monitoring voltage when ordering

Note: The "Supply / monitoring voltage Un" refers to the phase to neutral nominal voltage for the product and voltage variants available. To convert these voltages to a phase to phase voltage, multiply by 1.732.

CONNECTION DIAGRAM

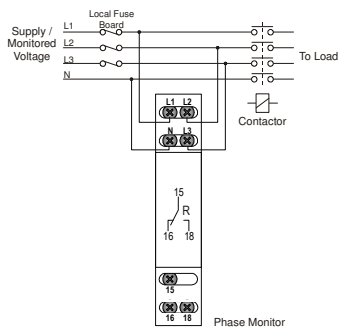

SETTING DETAILS

1. Power supply status (Green) LED
2. Relay output / Timing status (Red) LED
3. "Over %" trip level adjustment^
4. "Delay (t)" adjustment
5. Under %" trip level adjustment^

^scaled as % of the nominal voltage "Un"

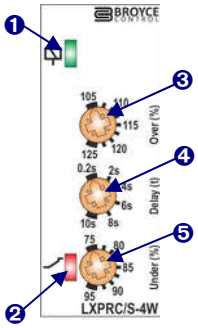

DIMENSIONS

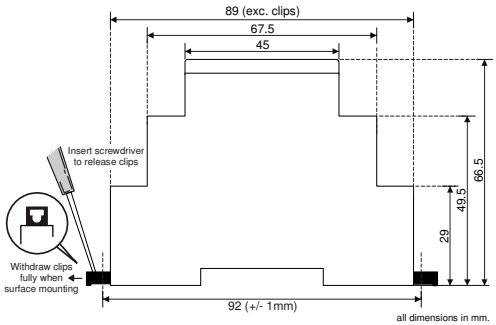

Broyce Control Ltd., Pool Street, Wolverhampton, West Midlands WV2 4HN. England
Tel: +44 (0) 1902 773746 Fax: +44 (0) 1902 420639 Email: sales@broycecontrol.com Web: www.broycecontrol.com

The Information provided in this literature is believed to be accurate (subject to change without prior notice); however, use of such information shall be entirely at the user's own risk.