RGK601

Automatic mains failure (AMF) gen-set controller, 12/24VDC, USB/optical and Wi-Fi point programming port on front, Canbus port, IP54



Product designation		Automatic mains failure gen-set controllers
Product type designation		RGK601
Power supply		
Rated battery voltage	V	12/24VDC
Digital inputs		
Digital input type		4 neg.+ 1 pos.
"W"/AC/PICK-UP speed inputs		
"W"/AC/PICK-UP speed input type		"W" or generator frequency or "Pick-up"
Voltage inputs		
Rated voltage (Ue)	VAC	100…480
Measurement range	V	100…480
Frequency range	Hz	45…65
Measurement method		TRMS
Current inputs		
Rated current (Ie)	A	5A/1A
Measurement range		0.05…6A or 0.05…1.2A
Amperometric inputs type		3PH, /5A or /1A
Measurement method		TRMS
Static Outputs		
Static output type		6 (SSR)
Interface		
CANbus		Yes
Ambient conditions		
Protection degree		IP40, IP65 with optinal gasket seal
Dimensions		

The characteristics described in this document are subject to updates or modifications at any time. The descriptions, technical and functional information, illustrations and instructions in this brochure are purely illustrative, and are consequently not contractually binding

RGK601

Automatic mains failure (AMF) gen-set controller, 12/24VDC, USB/optical and Wi-Fi point programming port on front, Canbus port, IP54

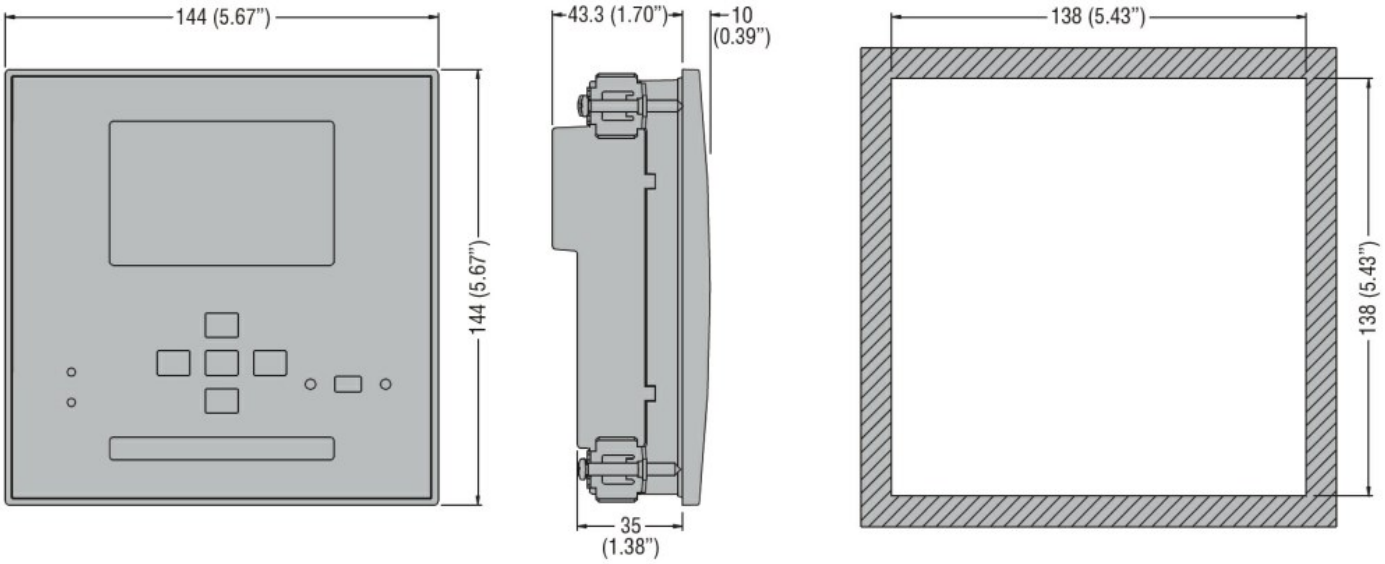

Wiring diagrams

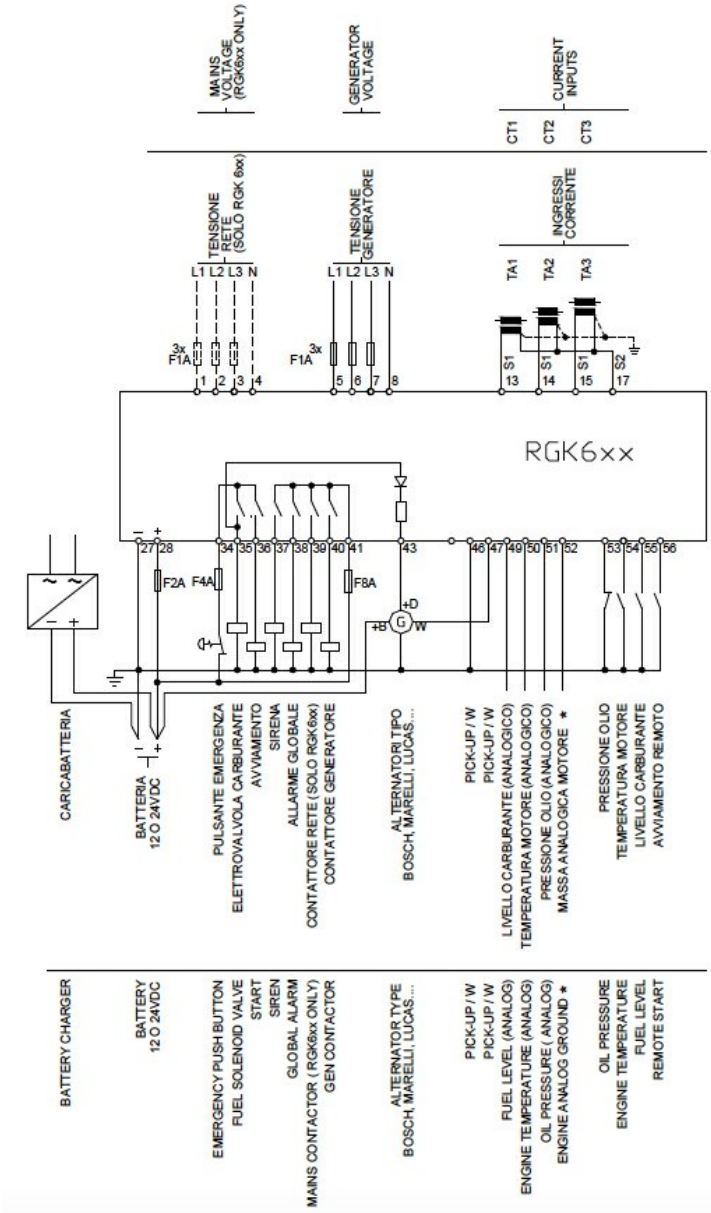

Certifications and compliance

The characteristics described in this document are subject to updates or modifications at any time. The descriptions, technical and functional information, illustrations and instructions in this brochure are purely illustrative, and are consequently not contractually binding

Compliance	
	CSA C22.2 n° 14
	IEC/EN 61000-6-2
	IEC/EN 61000-6-3
	IEC/EN 61010-1
	UL 508

Certificates	
	EAC
	UL Listed for USA and Canada (cULus-File E93601)

ETIM classification

ETIM 8.0	EC002758 - Energy management controller

The characteristics described in this document are subject to updates or modifications at any time. The descriptions, technical and functional information, illustrations and instructions in this brochure are purely illustrative, and are consequently not contractually binding