EVF570

Wirable socket

SDOAH050VASFKPG

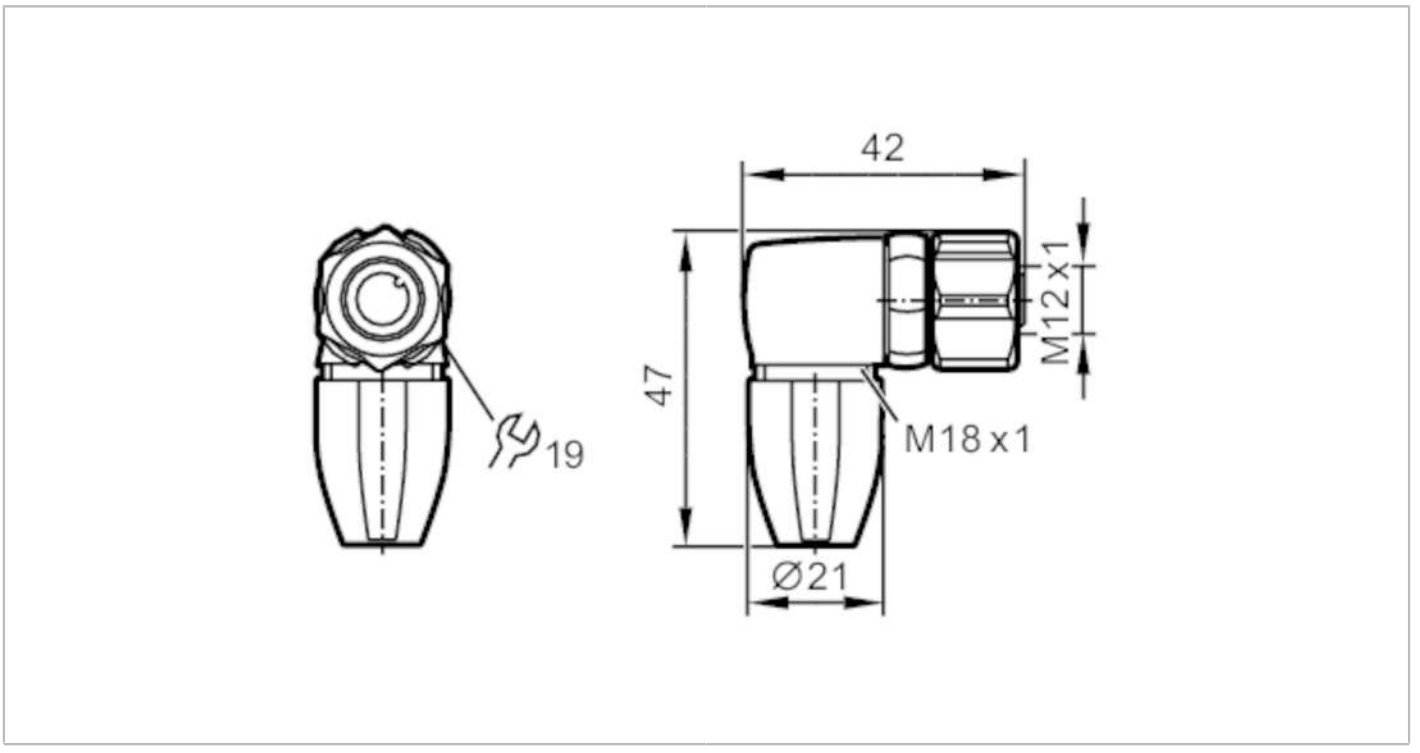

Application		
Special feature		Free from silicone; Gold-plated contacts
Application		hygienic and wet areas in the food industry
Free from silicone		yes
Electrical data		
Operating voltage	[V]	< 60 AC/DC
Protection class		II
Max. current load total	[A]	4; (...40 °C)
Operating conditions		
Ambient temperature	[°C]	-25...100
Storage temperature	[°C]	-25...55
Storage humidity	[%]	10...100
Other climatic conditions for storage according to stated class		1K22/ DIN 60721-3-1
Protection		IP 65; IP 67; IP 68; IP 69K
Mechanical data		
Weight	[g]	42
Moulded-body material		PA 6.6
Material nut		stainless steel (1.4404 / 316L)
Sealing material		EPDM
Remarks		
Pack quantity		1 pcs.

EVF570

Wirable socket

SDOAH050VASFKPG

Electrical connection

screw terminals: 0.25...1 mm²; Cable sheath: Ø 3.5...6 mm; AWG 23...17

Electrical connection - socket

Connector: 1 x M12, angled; coding: A; Moulded body: PA 6.6, grey; Locking: stainless steel (1.4404 / 316L); Sealing: EPDM; Contacts: gold-plated; Tightening torque: 0.6...1.2 Nm; Take into account the maximum value of the counterpart!



Connection

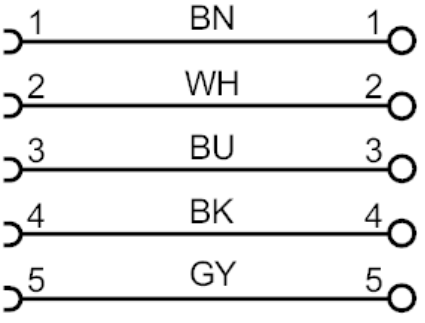

	Core colours
BK	black
BN	brown
BU	blue
GY	grey
WH	white
	colours to DIN EN 60947-5-2