MURR ELEKTRONIK
stay connected

MVP12, 4XM12, UNIVERSAL, BASIC HOUSING

Pins wired 1:1 to terminal

4-way UNIVERSAL
Basic module
Screw plug-in terminals
Replaces identical product (Art.No. 276624)
Separation contact 5 possible by removable plug links
Plastic housings with good resistance against chemicals and oils.
The resistance to aggressive media should be individually tested for your application. Further details on request.

Link to Product

Illustration



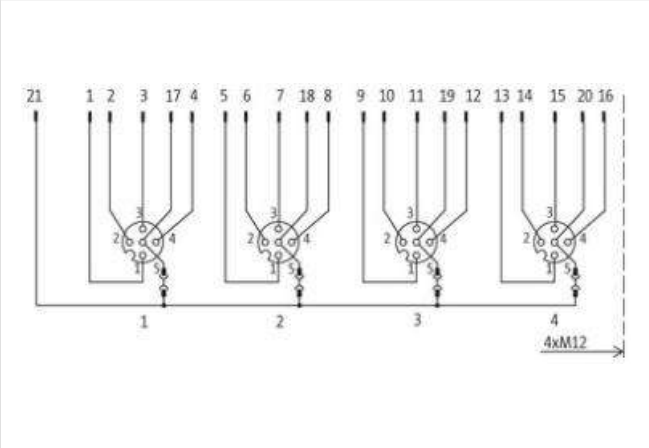

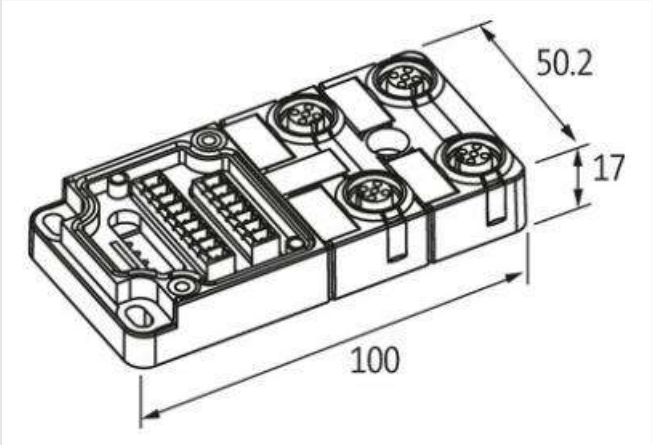

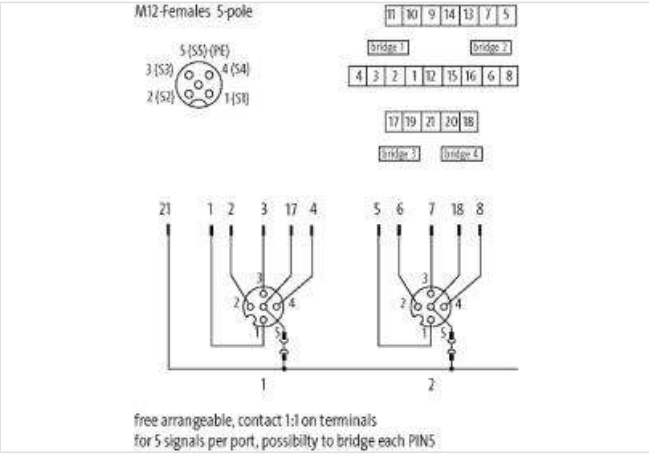

Product may differ from Image

Commercial data

ECLASS-6.0	27279219
ECLASS-6.1	27279219
ECLASS-7.0	27279219

The information in this Product-PDF has been compiled with the utmost care.
Liability for the correctness completeness and topicality of the information is restricted to gross negligence. Version: 2024-01-31

MURR ELEKTRONIK
stay connected

ECLASS-8.0	27279219
ECLASS-9.0	27440108
ECLASS-10.1	27440111
ECLASS-11.1	27440111
ECLASS-12.0	27440111
ETIM-5.0	EC002585
customs tariff number	85369010
GTIN	4048879353427
Packaging unit	1
Electrical data | Supply	
Operating voltage AC max.	42 V
Operating voltage DC max.	42 V
Current operating per contact max.	4 A
Total current max.	8 A
Device protection | Electrical	
Degree of protection (EN IEC 60529)	IP65, IP67
Device protection | Media	
Flame resistance	flame retardant
Mechanical data | Material data	
Material housing	Plastic
Environmental characteristics | Climatic	
Operating temperature min.	-20 °C
Operating temperature max.	80 °C
Connection type 2	
Family construction form	Cap
No. of poles	21
PIN 1	Bu 1 Pin 1
PIN 2	Bu 1 Pin 2
PIN 3	Bu 1 Pin 3
PIN 4	Bu 1 Pin 4
PIN 5	Bu 2 Pin 1
PIN 6	Bu 2 Pin 2
PIN 7	Bu 2 Pin 3
PIN 8	Bu 2 Pin 4
PIN 9	Bu 3 Pin 1
PIN 10	Bu 3 Pin 2
PIN 11	Bu 3 Pin 3
PIN 12	Bu 3 Pin 4
PIN 13	Bu 4 Pin 1
PIN 14	Bu 4 Pin 2
PIN 15	Bu 4 Pin 3
PIN 16	Bu 4 Pin 4
PIN 17	Bu 1 Pin 5
PIN 18	Bu 2 Pin 5
PIN 19	Bu 3 Pin 5
PIN 20	Bu 4 Pin 5
PIN 21	Br 1 - Br 4
Family construction form	M12
Gender	female
Color contact carrier	black
Coding	A
No. of poles	5

The information in this Product-PDF has been compiled with the utmost care.
Liability for the correctness completeness and topicality of the information is restricted to gross negligence. Version: 2024-01-31