Up to PL e of EN ISO 13849-1
PNOZ X5



Safety relay for monitoring E-STOP pushbuttons, safety gates and light beam devices

Approvals

	PNOZ X5
cULus LISTED	◆
TÜV SÜDDEUTSCHLAND	◆
CE	◆

Unit features

- Positive-guided relay outputs:
  - 2 safety contacts (N/O), instantaneous
- Connection options for:
  - E-STOP pushbutton
  - Safety gate limit switch
  - Reset button
  - Light barriers
- LED indicator for:
  - Switch status channel 1/2
  - Supply voltage
- See order reference for unit types

Unit description

The safety relay meets the requirements of EN 60947-5-1, EN 60204-1 and VDE 0113-1 and may be used in applications with

- E-STOP pushbuttons
- Safety gates
- Light beam devices

Safety features

The relay meets the following safety requirements:

- The circuit is redundant with built-in self-monitoring.
- The safety function remains effective in the case of a component failure.
- The correct opening and closing of the safety function relays is tested automatically in each on-off cycle.
- The unit has an electronic fuse.

Block diagram

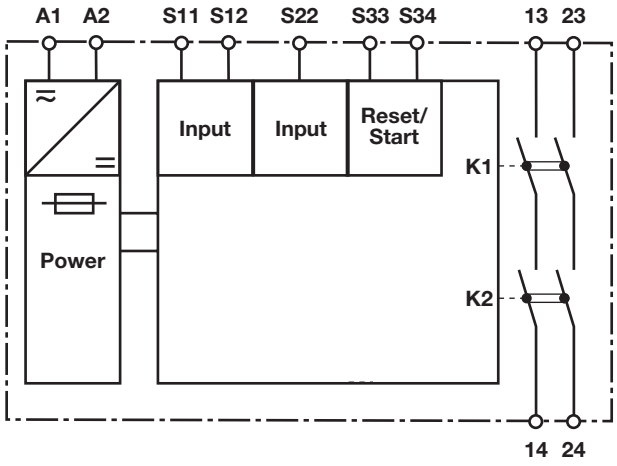

Up to PL e of EN ISO 13849-1
PNOZ X5

Function description

- Single-channel operation: no redundancy in the input circuit, earth faults in the reset circuit are detected.
- Dual-channel operation without detection of shorts across contacts: redundant input circuit, detects
  - earth faults in the reset and input circuit,
  - short circuits in the input circuit and, with a monitored reset, in the reset circuit too.
- Automatic start: Unit is active once the input circuit has been closed.
- Manual reset: Unit is active once the input circuit is closed and then the reset circuit is closed.
- Increase in the number of available instantaneous safety contacts by connecting contact expansion modules or external contactors.

Timing diagram

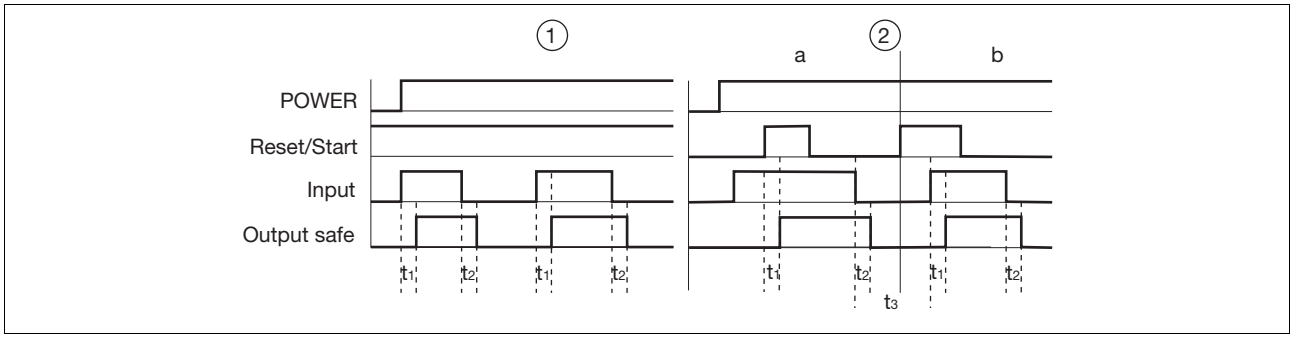

Key

- Power: Supply voltage
- Reset/Start: Reset circuit S33-S34
- Input: Input circuits S11, S12, S22
- Output safe: Safety contacts 13-14, 23-24
- ①: Automatic reset
- ②: Manual reset
- a: Input circuit closes before reset circuit
- b: Reset circuit closes before input circuit
- t_1: Switch-on delay
- t_2: Delay-on de-energisation
- t_3: Recovery time

Wiring

Please note:

- Information given in the “Technical details” must be followed.
- Outputs 13-14, 23-24 are safety contacts.
- To prevent contact welding, a fuse should be connected before the output contacts (see technical details).
- Calculation of the max. cable runs l_{max} in the input circuit:

$$l_{max} = \frac{R_{lmax}}{R_l / km}$$

R_{lmax} = max. overall cable resistance (see technical details)
R_l /km = cable resistance/km

- Use copper wire that can withstand 60/75 °C.
- Sufficient fuse protection must be provided on all output contacts with capacitive and inductive loads.

Pilz GmbH & Co. KG, Felix-Wankel-Straße 2, 73760 Ostfildern, Germany
Telephone: +49 711 3409-0, Telefax: +49 711 3409-133, E-Mail: pilz.gmbh@pilz.de

Up to PL e of EN ISO 13849-1
PNOZ X5

Preparing for operation

- Supply voltage

Supply voltage	AC	DC
	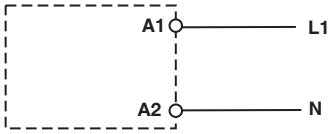	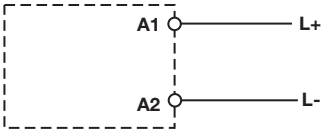

- Input circuit

Input circuit	Single-channel	Dual-channel
E-STOP **without** detection of shorts across contacts	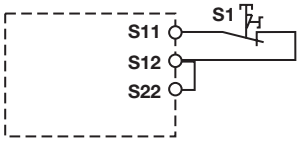	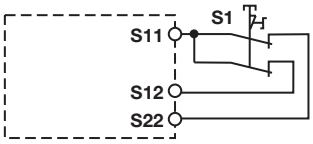
Safety gate **without** detection of shorts across contacts	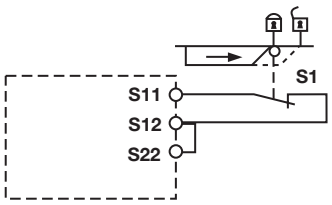	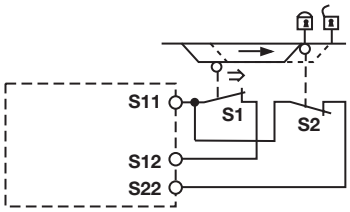
Light barrier **with** detection of shorts across contacts via ESPE		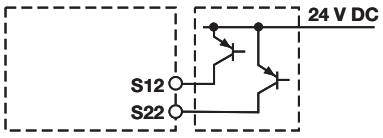

- Reset circuit

Reset circuit	E-STOP wiring (single-channel) Safety gate (single-channel)	E-STOP wiring (dual-channel) Safety gate (dual-channel)
Automatic reset		
Manual reset	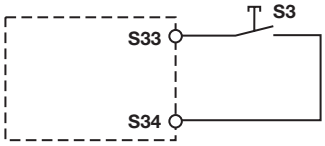	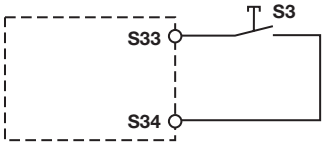

Up to PL e of EN ISO 13849-1
PNOZ X5

- Feedback loop

Feedback loop	
Contacts from external contactors	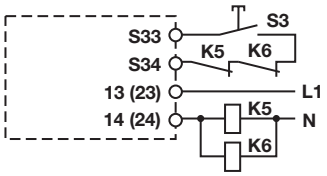

- Key

S1/S2	E-STOP/safety gate switch
S3	Reset button
	Switch operated
	Gate open
	Gate closed

Up to PL e of EN ISO 13849-1
PNOZ X5

Terminal configuration

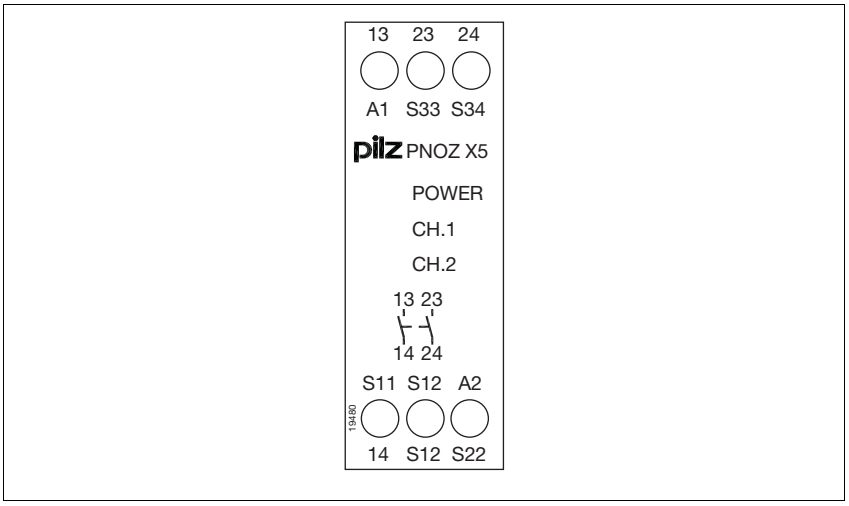

Installation

- The safety relay should be installed in a control cabinet with a protection type of at least IP54.
- Use the notch on the rear of the unit to attach it to a DIN rail.
- Ensure the unit is mounted securely on a vertical DIN rail (35 mm) by using a fixing element (e.g. retaining bracket or an end angle).

Dimensions

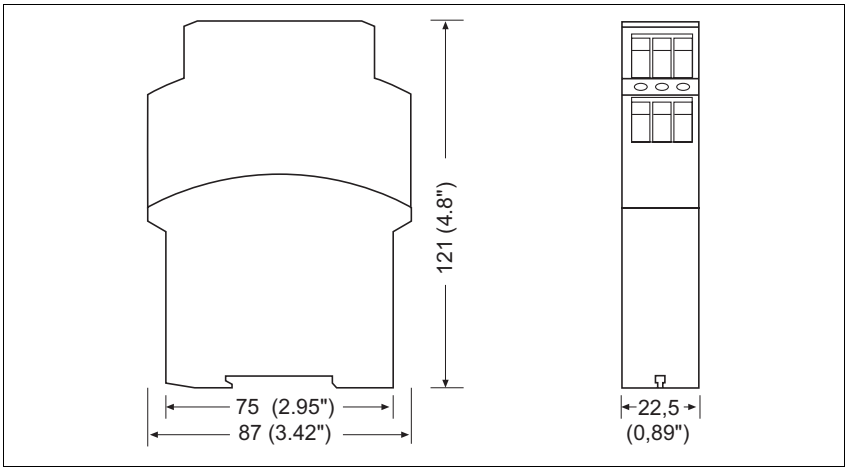

Up to PL e of EN ISO 13849-1
PNOZ X5

Notice

This data sheet is only intended for use during configuration. For installation and operation, please refer to the operating instructions supplied with the unit.

Service life graph

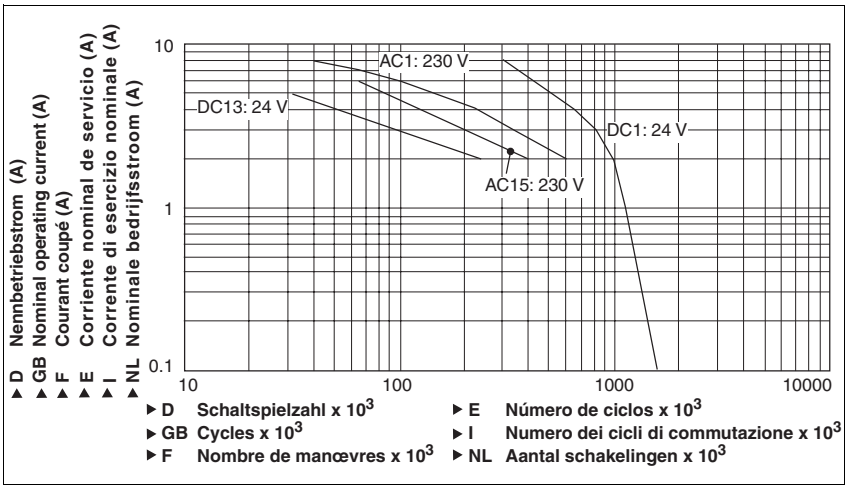

Technical details

Electrical data	
Supply voltage	
Supply voltage U_B DC	**12 V**
Supply voltage U_B AC/DC	**24 V**
Voltage tolerance	**-15 %/+10 %** No. 774325 **-20 %/+20 %** No. 774326, 774327
Power consumption at U_B AC	**4.0 VA** No. 774325
Power consumption at U_B DC	**2.0 W** No. 774325 **2.5 W** No. 774326, 774327
Frequency range AC	**50 - 60 Hz**
Residual ripple DC	**20 %**, **160 %**
Voltage and current at	
Input circuit DC: **24.0 V**	**55.0 mA** No. 774325 **70.0 mA** No. 774326, 774327
Reset circuit DC: **24.0 V**	**55.0 mA** No. 774325 **90.0 mA** No. 774326, 774327
Feedback loop DC: **24.0 V**	**55.0 mA** No. 774325 **90.0 mA** No. 774326, 774327
Number of output contacts	
Safety contacts (S) instantaneous:	**2**
Utilisation category in accordance with **EN 60947-4-1**	
Safety contacts: AC1 at **240 V**	I_{min}: **0.01 A** , I_{max}: **6.0 A** P_{max}: **1500 VA**
Safety contacts: DC1 at **24 V**	I_{min}: **0.01 A** , I_{max}: **4.0 A** P_{max}: **100 W**
Utilisation category in accordance with **EN 60947-5-1**	
Safety contacts: AC15 at **230 V**	I_{max}: **5.0 A**
Safety contacts: DC13 at **24 V** (6 cycles/min)	I_{max}: **4.0 A**
Conventional thermal current	**6.0 A**
Contact material	**AgSnO2 + 0.2µ Au**

Up to PL e of EN ISO 13849-1
PNOZ X5

Electrical data	
External contact fuse protection (I_K = 1 kA) to **EN 60947-5-1**	
Blow-out fuse, quick	
Safety contacts:	**6 A**
Blow-out fuse, slow	
Safety contacts:	**4 A**
Circuit breaker 24 VAC/DC, characteristic B/C	
Safety contacts:	**4 A**
Max. overall cable resistance R_{lmax} input circuits, reset circuits	
single-channel at U_B DC	**20 Ohm** No. 774326, 774327 **50 Ohm** No. 774325
single-channel at U_B AC	**150 Ohm** No. 774325
dual-channel without detect. of shorts across contacts at U_B DC	**100 Ohm** No. 774325 **35 Ohm** No. 774326, 774327
dual-channel without detect. of shorts across contacts at U_B AC	**250 Ohm** No. 774325
Min. input resistance in the starting torque	**24 Ohm** No. 774326, 774327 **95 Ohm** No. 774325
Safety-related characteristic data	
PL in accordance with **EN ISO 13849-1**	**PL e** (**Cat. 4**)
Category in accordance with **EN 954-1**	**Cat. 4**
SIL CL in accordance with **EN IEC 62061**	**SIL CL 3**
PFH in accordance with **EN IEC 62061**	**2.31E-09**
SIL in accordance with **IEC 61511**	**SIL 3**
PFD in accordance with **IEC 61511**	**2.03E-06**
t_M in years	**20**
Times	
Switch-on delay	
with automatic reset typ.	**115 ms** No. 774325 **124 ms** No. 774326, 774327
with automatic reset max.	**180 ms** No. 774325 **230 ms** No. 774326, 774327
with automatic reset after power on typ.	**120 ms** No. 774325 **124 ms** No. 774326, 774327
with automatic reset after power on max.	**190 ms** No. 774325 **230 ms** No. 774326, 774327
with manual reset typ.	**40 ms** No. 774325 **80 ms** No. 774326, 774327
with manual reset max.	**180 ms** No. 774325 **230 ms** No. 774326, 774327
Delay-on de-energisation	
with E-STOP typ.	**12 ms** No. 774326, 774327 **18 ms** No. 774325
with E-STOP max.	**20 ms** No. 774326, 774327 **30 ms** No. 774325
with power failure typ.	**110 ms** No. 774325 **20 ms** No. 774326, 774327
with power failure max.	**160 ms** No. 774325 **30 ms** No. 774326, 774327
Recovery time at max. switching frequency 1/s	
after E-STOP	**40 ms** No. 774326, 774327 **50 ms** No. 774325
after power failure	**200 ms** No. 774325 **50 ms** No. 774326, 774327
Simultaneity, channel 1 and 2	∞
Supply interruption before de-energisation	**10 ms** No. 774326, 774327 **20 ms** No. 774325

Up to PL e of EN ISO 13849-1
PNOZ X5

Environmental data	
EMC	**EN 60947-5-1**, **EN 61000-6-2**
Vibration to **EN 60068-2-6**	
Frequency	**10 - 55 Hz**
Amplitude	**0.35 mm**
Climatic suitability	**EN 60068-2-78**
Airgap creepage in accordance with **EN 60947-1**	
Pollution degree	**2**
Overvoltage category	**III**
Rated insulation voltage	**250 V**
Rated impulse withstand voltage	**4.00 kV**
Ambient temperature	**-10 - 55 °C**
Storage temperature	**-40 - 85 °C**
Protection type	
Mounting (e.g. cabinet)	**IP54**
Housing	**IP40**
Terminals	**IP20**
Mechanical data	
Housing material	
Housing	**PPO UL 94 V0**
Front	**ABS UL 94 V0**
Cross section of external conductors with screw terminals	
1 core flexible	**0.20 - 4.00 mm² , 24 - 10 AWG**
2 core, same cross section, flexible:	
with crimp connectors, without insulating sleeve	**0.20 - 2.50 mm² , 24 - 14 AWG**
without crimp connectors or with TWIN crimp connectors	**0.20 - 2.50 mm² , 24 - 14 AWG**
Torque setting with screw terminals	**0.60 Nm**
Dimensions	
Height	**87.0 mm**
Width	**22.5 mm**
Depth	**121.0 mm**
Weight	**190 g**

No. stands for order number.

The standards current on **09/03** apply.

Order reference

Type	Features		Terminals	Order no.
PNOZ X5	24 VAC/DC		Screw terminals	774 325
PNOZ X5		12 VDC	Screw terminals	774 326
PNOZ X5 (coated version)		12 V DC	Screw terminals	774 327