PT2402

Pressure transmitter

PT-100PSEN14-A-ZVG/US/ /W

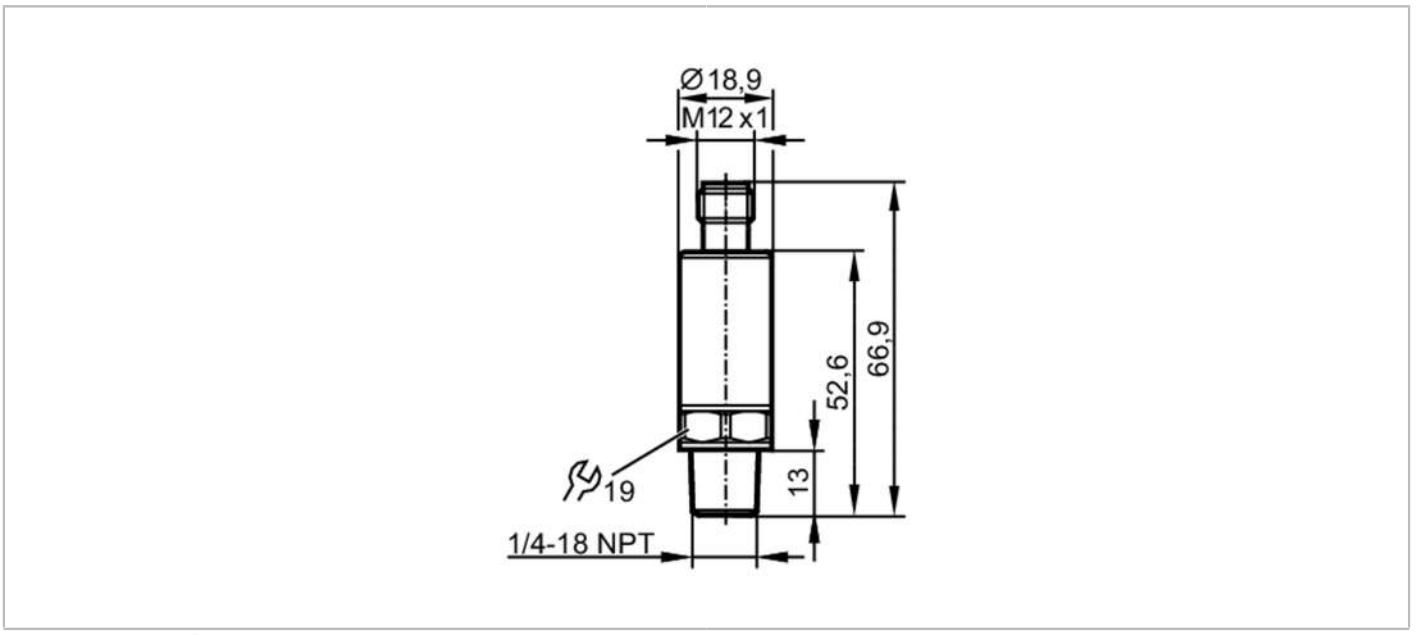

Product characteristics			
Number of inputs and outputs		Number of analogue outputs: 1	
Measuring range		0...1000 psi	0...6890 kPa
Process connection		threaded connection 1/4" NPT external thread	
Application			
Application		for industrial applications	
Media		liquids and gases	
Medium temperature	[°C]	-40...90	
Min. bursting pressure		13050 psi	90 MPa
Pressure rating		2500 psi	17 MPa
Note on pressure rating		static	
Vacuum resistance		-14.5 psi	-0.1 MPa
Type of pressure		relative pressure	
MAWP (for applications according to CRN)	[psi]	2500	
Electrical data			
Operating voltage	[V]	8.5...36 DC	
Min. insulation resistance	[MΩ]	100; (500 V DC)	
Protection class		III	
Reverse polarity protection		yes	
Power-on delay time	[s]	< 0.1	
Inputs / outputs			
Number of inputs and outputs		Number of analogue outputs: 1	
Outputs			
Total number of outputs		1	
Output signal		analogue signal	
Number of analogue outputs		1	

PT2402

Pressure transmitter

PT-100PSEN14-A-ZVG/US/ /W

Analogue current output	[mA]	4...20	
Max. load	[Ω]	(Ub – 8,5 V) / 21,5 mA; @8,5V= 0 Ω; @12V max. 160 Ω; @24V max. 720 Ω	
Short-circuit proof		yes	
Overload protection		yes	
Measuring/setting range			
Measuring range		0...1000 psi	0...6890 kPa
Accuracy / deviations			
Repeatability	[% of the span]	< ± 0,05; (with temperature fluctuations < 10 K)	
Characteristics deviation	[% of the span]	< ± 0,5; (incl. drift when overtightened, zero point and span error, non-linearity, hysteresis)	
Linearity deviation	[% of the span]	< ± 0,1 (BFSL) / < ± 0,2 (LS)	
Hysteresis deviation	[% of the span]	< ± 0,2	
Long-term stability	[% of the span]	< ± 0,1; (per 6 months)	
Temperature coefficient zero point and span	[% of the span / 10 K]	< 0,1 (-25...90 °C) / < 0,2 (-40...-25 °C)	
Response times			
Step response time analogue output	[ms]	1	
Operating conditions			
Ambient temperature	[°C]	-40...90	
Storage temperature	[°C]	-40...100	
Protection		IP 67; IP 69K	
Tests / approvals			
EMC		DIN EN 61000-6-2	
		DIN EN 61000-6-3	
Shock resistance		DIN EN 60068-2-27	50 g (11 ms)
Vibration resistance		DIN EN 60068-2-6	20 g (10...2000 Hz)
MTTF	[years]	784	
Pressure Equipment Directive		Sound engineering practice; can be used for group 2 fluids; group 1 fluids on request	
Mechanical data			
Weight	[g]	58	
Housing		cylindrical	
Dimensions	[mm]	Ø 18.9 / L = 66.9	
Materials		stainless steel (630/1.4542/17-4 PH); stainless steel (316L/1.4404); PEI	
Materials (wetted parts)		stainless steel (630/1.4542/17-4 PH)	
Min. pressure cycles		60 million; (at 1.2 times nominal pressure)	
Tightening torque	[Nm]	< 50; (recommended tightening torque; depends on lubrication, seal and pressure rating)	
Process connection		threaded connection 1/4" NPT external thread	
Restrictor element integrated		no (can be retrofitted)	

PT2402

Pressure transmitter

PT-100PSEN14-A-ZVG/US/ /W

Remarks	
Remarks	BFSL = Best Fit Straight Line
	LS = limit value setting
Pack quantity	1 pcs.

Electrical connection

Connector: 1 x M12; coding: A



Connection

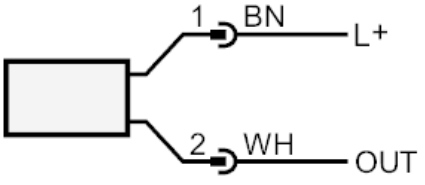

OUT	analogue output
	colours to DIN EN 60947-5-2
	Core colours :
BN =	brown
WH =	white