

Dimensions

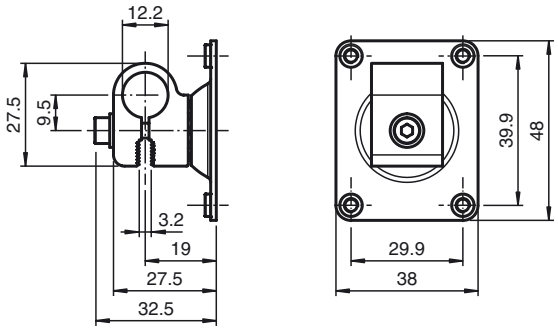

Technical data

Mechanical specifications	
Material	Aluminum Metal sheet (steel), zinc-plated
Screwed connection	Screws for assembly included
Mass	approx. 60 g
Note	Infinitely adjustable on all axes
Suitable series	
Series	R200 series

Model Number

OMH-R200-01

Mounting aid for round steel ø 12 mm or sheet 1.5 mm ... 3 mm

Features

- Bracket for round steel or sheet
- Simple and fast mounting

Release date: 2019-02-27 09:59 Date of issue: 2019-03-04 70100995_eng.xml