

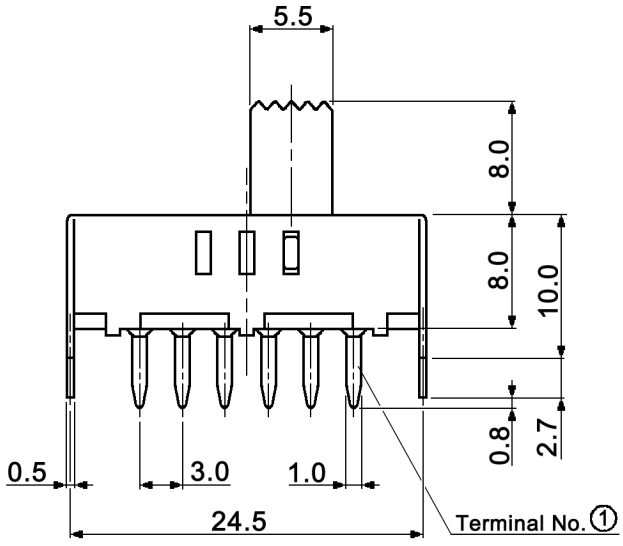

VIEW A

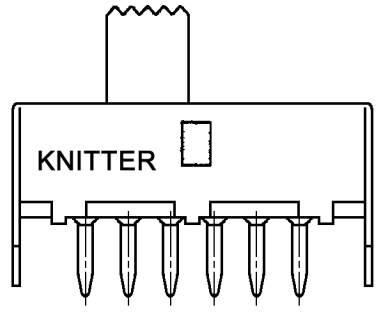

CIRCUIT DIAGRAM
C: COMMON PIN
BOTTOM VIEW

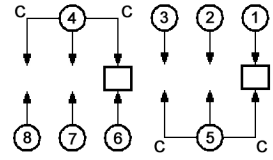

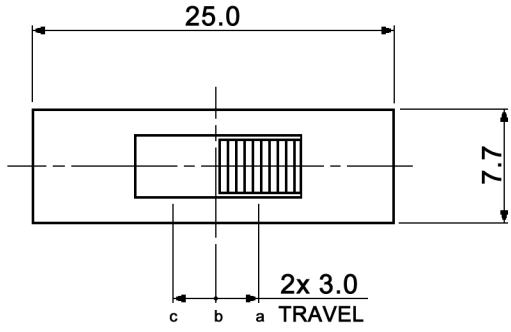

HOLE LAYOUT ⊕ 0.05

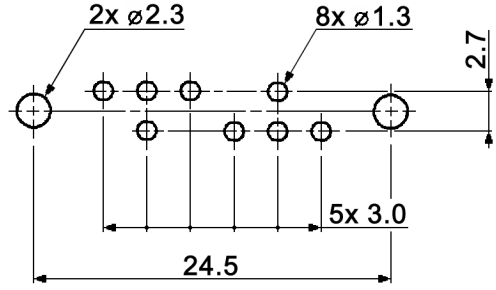

Specifications:

Contact rating:	350mA, 30V DC
Contact resistance:	20mOhm max.
Insulation resistance:	100MOhm min. at 500V DC
Dielectric strength:	500V, 50Hz for the duration of 1 minute
Operating temperature:	-20°C to +85°C
Mechanical life:	10 000 cycles min.
Soldering conditions:	auto-soldering: max.: 260 +/-5°C, 5sec.
Switching function:	on - on - on
Material:	Terminal: brass strip, silver plated
	Frame: steel, nickel plated
	Base: phenolic resin, natural
	Contact plate: brass strip, silver plated
	Spring: SWC, temper
	Steel ball: carbon steel, natural
	Slider: POM, black

RoHS-conform 2002/95/EC

Tolerances: up to 10: ±0.2mm above 10-50: ±0.3mm			Date	Name	MFP 231 P	
			02/12	dr		
			knitter-switch		30 25 57	Page 1/1
Modifications	Date	Name				