Brand of NTN corporation

Technical data

USFE208

Bearing units



Grey cast housing, radial insert ball bearing with socket set screws, single lip seal

KIT CONTENT

US.208.G2, FE208

VISUAL (S)

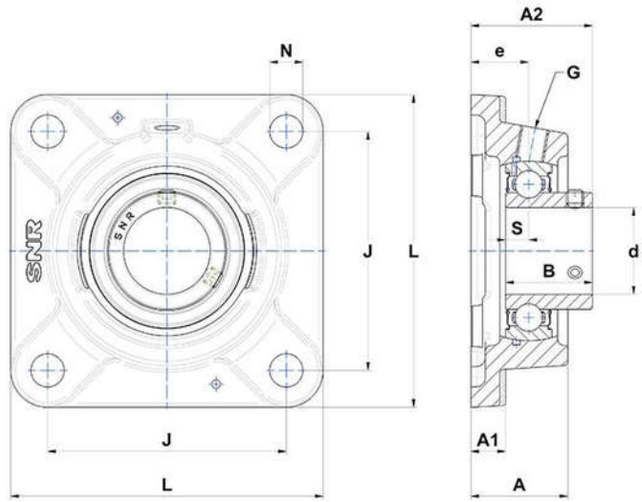

PRODUCT DEFINITION

Brand	SNR
A - Housing height	39,5 mm
A1 - Housing foot height / flange height	13 mm
A2 - Total height from mounting surface	49 mm
B - Width of Inner Ring	34 mm
d - Shaft diameter	40 mm

NTN Europe
1 rue des Usines · BP 2017 · 74010 Annecy Cedex · France · Tel. +33 (0)4 50 65 30 00
S.A. au capital de 322 639 919 € · RCS ANNECY B 325 821 072 · Id. Fiscale : FR 48 325 821 072
SIRET 325 821 072 00015 · Code APE 2815 Z · Code NACE 28.15

PRODUCT DEFINITION	
e - Distance mounting surface to bearing center	24 mm
G - Grease fitting	R1/8"
J - Mounting holes distance	101,5 mm
L - Housing width / diameter	130 mm
N - Mounting hole dimension	14 mm
S - Distance front side/bearing centre	9 mm

PRODUCT PERFORMANCE	
C - Dynamic load rating	29600000 mN
C0 - Static load rating	18200000 mN
Operating temperature min.	253,15 °K
Operating temperature max.	373,15 °K

OTHER FEATURES	
Mass	2,01 kg
Recommended tightening torque for set screw	11.5 N-m