DATASHEET - CI-K5-160-M



Insulated enclosure, HxWxD=280x200x160mm, +mounting plate

Part no.	**CI-K5-160-M**
Catalog No.	**206900**
EL-Nummer (Norway)	**0004138013**

Delivery program

Product range			CI-K small enclosures
Basic function			Basic enclosures
Product function			CI-K empty enclosures
Single unit/Complete unit			Single unit
Degree of Protection			Front IP65 IP65, with push-through cable entry
Degree of Protection			Front IP65 IP65, with push-through cable entry
Material			Glass-fibre reinforced polycarbonate
Colour			Enclosure base RAL 9005, black Operator only RAL 7035, light gray
Description			Metric cable entry knockouts top, bottom and in the back plate Control cable entry Lamp indicator L-… can be mounted in base knock-out M20/M25
Cable entry			hard knockout version
Dimensions			
Width		mm	200
Height		mm	280
Depth		mm	160
Dimensions		mm	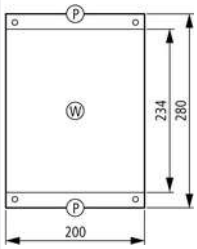
Enclosure depth			
Legend for the graphic			Dimensions from top: Mounting depth with mounting plate Mounting depth for mounting rail 7.5 mm height Mounting depth for mounting rail 15 mm height
Enclosure depth		mm	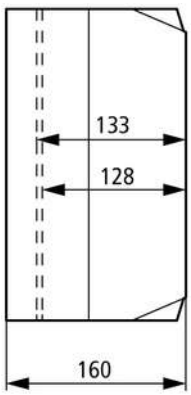
Mounting depth with mounting plate		mm	133
Features			with DIN-rail (weight of fitted components max. 1.7 kg)

Notes
P

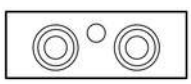

Knockouts
2 x M50/40/25

1 x M20

W

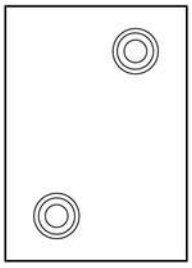

Back plate:
2 x M50/40/25

Technical data

General

Standards		IEC/EN 60529 DIN EN 62208
Climatic proofing		Damp heat, constant, to IEC 60068-2-78 Damp heat, cyclic, to IEC 60068-2-30
Ambient temperature	°C	-25 - +70 -25 - +40 (with push-through cable entry)
Degree of Protection		Front IP65 IP65, with push-through cable entry
Power loss		
Max. radiated heat dissipation with separate mounting, ambient air temperature +20 °C	W	41

Material characteristics

Material		
Base		Glass-fibre reinforced polycarbonate
Cover		Glass-fibre reinforced polycarbonate
Surface treatment		Resistant to corrosion
Colour		
Base		RAL 9005, black (matt)
Housing body		Enclosure cover RAL 7035, light grey (matt)

Material properties

Electrical		
Track resistance		CTI 175 (base, to IEC 60112) CTI 175 (cover, to IEC 60112)
Surface resistance to IEC 60093	$\Omega \times 10^{13}$	1
Dielectric strength to IEC 60243-1	kV/mm	30
Thermal		
Temperature resistant		-40 °C - 120 °C (enclosure) -40 °C - +80 °C (gasket)
Mechanical		
Impact resistance		IK06 according to EN 50102
max. assembly weights		
Mounting plate	kg	1
Mounting rail	kg	1
Chemical resistance		
Chemical resistant		Base, Cover Resistant against: Acids < 10 %, mineral oil, alcohol, gasoline, greases, salt solutions Partly resistant to: Acids > 10 %, alcohol Not resistant to: alkalis, benzene Push-through membrane (CI-K1/CI-K2) and sealing material Resistant against: Acids < 10 %, alkalis, benzene, salt solutions Partly resistant to: Acids > 10 %, greases, benzene Not resistant to: Mineral oil, benzene
Atmospheric		
Saline spray		IEC 60068-2-11
UV resistance		Beneath protective shield
Water consumption to DIN EN ISO 62	%	0.29
Flammability characteristics		
Glow wire test		

Flammability characteristics			960 °C/1mm thickness (base, cover; glow wire to VDE 0471 Part 2) 650 °C/1mm thick (push-through membrane) to VDE 0471 Part 2)
to UL 94			VO/1.5 mm thickness
to UL 94			HB
Halogen free			Yes

Design verification as per IEC/EN 61439

Technical data for design verification			
Rated operational current for specified heat dissipation	I_n	A	0
Heat dissipation per pole, current-dependent	P_{vid}	W	0
Equipment heat dissipation, current-dependent	P_{vid}	W	0
Static heat dissipation, non-current-dependent	P_{vs}	W	0
Heat dissipation capacity	P_{diss}	W	41
Operating ambient temperature min.		°C	-25
Operating ambient temperature max.		°C	70
Degree of Protection			Front IP65 IP65, with push-through cable entry
Max. radiated heat dissipation with separate mounting, ambient air temperature +20 °C		W	41
Flammability characteristics			960 °C/1mm thickness (base, cover; glow wire to VDE 0471 Part 2) 650 °C/1mm thick (push-through membrane) to VDE 0471 Part 2)
Track resistance			CTI 175 (base, to IEC 60112) CTI 175 (cover, to IEC 60112)
Surface treatment			Resistant to corrosion
Impact resistance			IK06 according to EN 50102
Temperature resistant			-40 °C - 120 °C (enclosure) -40 °C - +80 °C (gasket)
UV resistance			Beneath protective shield
IEC/EN 61439 design verification			
10.2 Strength of materials and parts			
10.2.2 Corrosion resistance			Meets the product standard's requirements.
10.2.3.1 Verification of thermal stability of enclosures			Meets the product standard's requirements.
10.2.3.2 Verification of resistance of insulating materials to normal heat			Meets the product standard's requirements.
10.2.3.3 Verification of resistance of insulating materials to abnormal heat and fire due to internal electric effects			Meets the product standard's requirements.
10.2.4 Resistance to ultra-violet (UV) radiation			Please enquire
10.2.5 Lifting			Not applicable.
10.2.6 Mechanical impact			Does not apply, since the entire switchgear needs to be evaluated.
10.2.7 Inscriptions			Meets the product standard's requirements.
10.3 Degree of protection of ASSEMBLIES			Meets the product standard's requirements.
10.4 Clearances and creepage distances			Meets the product standard's requirements.
10.5 Protection against electric shock			Does not apply, since the entire switchgear needs to be evaluated.
10.6 Incorporation of switching devices and components			Does not apply, since the entire switchgear needs to be evaluated.
10.7 Internal electrical circuits and connections			Is the panel builder's responsibility.
10.8 Connections for external conductors			Is the panel builder's responsibility.
10.9 Insulation properties			
10.9.2 Power-frequency electric strength			Is the panel builder's responsibility.
10.9.3 Impulse withstand voltage			Is the panel builder's responsibility.
10.9.4 Testing of enclosures made of insulating material			Meets the product standard's requirements.
10.10 Temperature rise			The panel builder is responsible for the temperature rise calculation. Eaton will provide heat dissipation data for the devices.
10.11 Short-circuit rating			Is the panel builder's responsibility. The specifications for the switchgear must be observed.
10.12 Electromagnetic compatibility			Is the panel builder's responsibility. The specifications for the switchgear must be observed.
10.13 Mechanical function			The device meets the requirements, provided the information in the instruction leaflet (IL) is observed.

Technical data ETIM 7.0

Low-voltage industrial components (EG000017) / Empty enclosure for switchgear (EC000712)			
Electric engineering, automation, process control engineering / Low-voltage switch technology / Component for low-voltage switching technology / Empty housing for switch devices (ecl@ss10.0.1-27-37-13-01 [AKN343014])			
Material housing			Plastic
Width		mm	200
Height		mm	280
Depth		mm	160
With transparent cover			No
Suitable for emergency stop			Yes
Model			Surface mounting
Degree of protection (IP)			IP65
Degree of protection (NEMA)			Other

Dimensions

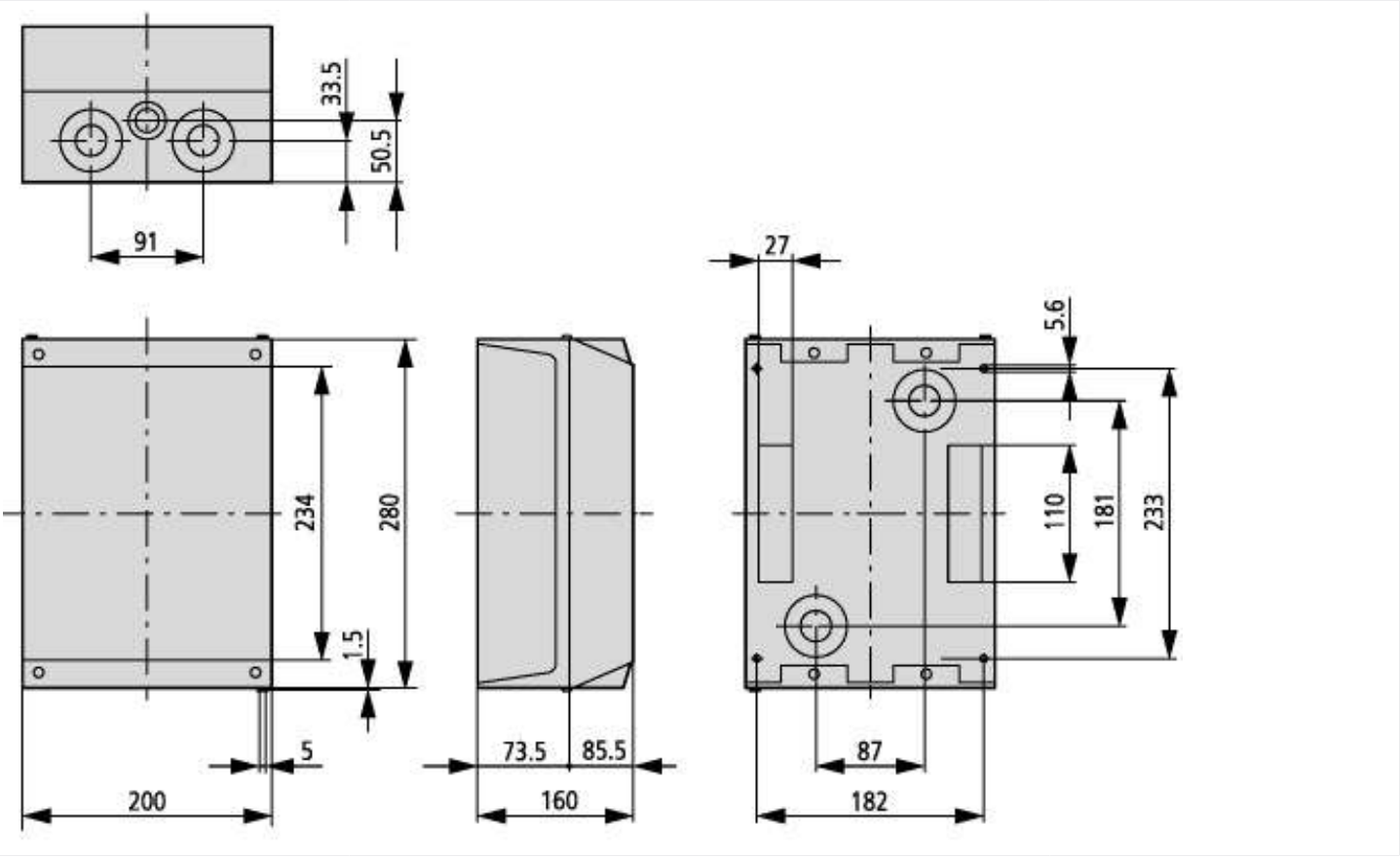

© 05/2021 by Eaton Industries GmbH