Yealink

SIP-T34W

Entry-level IP Phone with 4 Lines & Color LCD

An entry-level color screen IP phone with high performance, Yealink SIP-T34W offers support for 4 lines and includes local 5-way conferencing. For its fashionable appearance as well as an extra-large 320x240-pixel color display with backlight, it brings comfortable operation experience and clear visual experience for users. With the built-in dual-band 2.4G/5G Wi-Fi, the T34W ensures you to keep up with the latest wireless technology and gain an advantage in the future wireless era. Additionally, it features a USB 2.0 port that provides seamless connectivity with Yealink wired USB headsets and Bluetooth headsets (via Yealink BT50/BT51A Bluetooth adapters). Designed with a new powerful chip, it helps greatly improved work efficiency. Additional features include a dual-port Gigabit Ethernet with integrated PoE, EHS35 support for Yealink wireless headset, and adjustable multi-angle stand support. These features allow the SIP-T34W to be a high-quality but cost-effective classic IP phone that maximizes productivity in both small and large office environments.

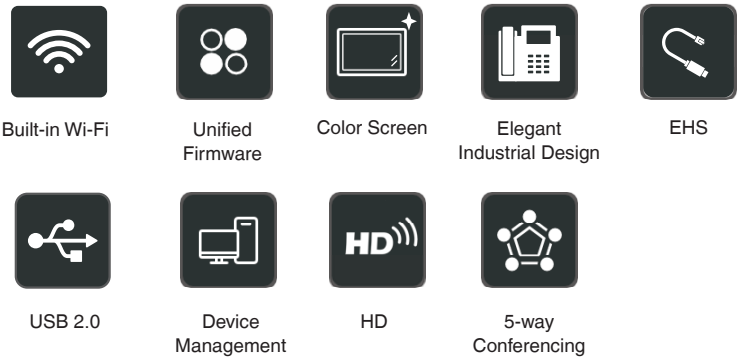



Key Features and Benefits

Stronger Performance, More Possibilities

Equipped with powerful chip, the T3 series owns a stronger computing ability and more upgraded functions, which ensures a higher productivity and smoother office experience. Due to great performance, T3 series is capable to extend more services for different business demands.

Superior HD Audio, Better Communication

The Yealink T3 series provides distraction-free communications with industry leading Smart Noise Filtering Technology, which delivers excellent sound quality without extraneous noises and allows fluent conversations.

Wireless Trasnsmission

In order to adapt to the upcoming era of 5G Wi-Fi, the SIP-T34W is equipped with dual-band Wi-Fi (Dual band). 5G Wi-Fi offers better anti-interference capabilities and faster speeds, allowing you to stay ahead in a busy data environment.

High Expandability

The SIP-T34W features strong expandability with its integrated USB 2.0 interface, providing seamless connectivity with Yealink wired USB headsets and Bluetooth headsets (via Yealink BT50/BT51A Bluetooth adapters).

All in One Platform, Convenient Management

Proven reliability and integrations for Yealink Device Management Platform, installed the unified firmware, T3 series is simple to deploy and manage, which allows a significant reduction in the operation and maintenance cost.

- Built-in dual band 2.4G/5G Wi-Fi (802.11a/b/g/n/ac)
- USB 2.0 port for wired USB headsets/Bluetooth headsets
- Yealink HD Voice
- 2.4” 320 x 240-pixel color display with backlight
- Dual-port Gigabit Ethernet
- PoE support
- Up to 4 SIP accounts
- Local 5-way conferencing
- Support EHS Wireless Headset
- Unified Firmware
- Support YDMP/YMCS
- Stand with 2 adjustable angles
- Wall mountable
- Handset with hall switch

Yealink

Specifications

Audio Features

- HD voice: HD handset, HD speaker
- Smart Noise Filtering
- Wideband codec: G.722
- Narrowband codec: PCMU (G.711μ), PCMA (G.711A), G.723.1, G.729, G.729A, G.729B, G.729AB, G.726, iLBC
- DTMF: In-band, Out-of-band (RFC 2833) and SIP INFO
- Full-duplex hands-free speakerphone with AEC
- VAD, CNG, AEC, PLC, AJB, AGC

Phone Features

- 4 VoIP accounts
- Call hold, mute, DND
- One-touch speed dial, hotline
- Call forward, call waiting, call transfer
- Group listening, SMS, emergency call
- Redial, call return, auto answer
- Local 5-way conferencing
- Direct IP call without SIP proxy
- Ring tone selection/import/delete
- Set date time manually or automatically
- Dial plan
- XML Browser, action URL/URI
- Integrated screenshots
- RTCP-XR, VQ-RTCPXR
- Built-in dual band Wi-Fi:
  - Network standard: IEEE802.11a/b/g/n/ac
  - Transmission rate: Up to 433Mbps (dynamic)
  - Frequency range: 2.4GHz/5.0GHz
- USB port (2.0 compliant) for: Yealink wired/Bluetooth headsets
- Enhanced DSS Key

Directory

- Local phonebook up to 1000 entries
- Blocklist
- XML/LDAP remote phonebook
- Smart dialing
- Phonebook search/import/export
- Call history: dialed/received/missed/forwarded

IP-PBX Features

- Busy Lamp Field (BLF), Bridged Line Appearance (BLA)
- Anonymous call, anonymous call rejection
- Hot-desking, voice mail
- Flexible seating
- Call park, call pickup
- Executive and Assistant
- Centralized call recording
- Visual voice mail
- Call recording

Display and Indicator

- 2.4" 320 x 240-pixel color display with backlight
- 16 bit depth color
- LED for call and message waiting indication
- Dual-color (red or green) illuminated LEDs for line status information
- Wallpaper
- Intuitive user interface with icons and soft keys
- Multilingual user interface
- Caller ID with name and number
- Screensaver
- Power saving

Feature keys

- 4 line keys with LED
- 4 line keys can be programmed up to 12 paper-less DSS keys (4-page view)
- 5 features keys: message, headset, redial, mute, hands-free speakerphone
- 6 navigation keys
- Volume control keys

Interface

- Dual-port Gigabit Ethernet
- Power over Ethernet (IEEE 802.3af), class 2
- 1 x RJ9 (4P4C) handset port
- 1 x RJ9 (4P4C) headset port

Other Physical Features

- Color: Classic Grey
- Wall mountable
- External Yealink AC adapter
  AC 100-240 V input and DC 5 V/1.2 A output
- Power consumption (PSU): 1.65-2.94 W
- Power consumption (PoE): 2.33-3.35 W
- Dimension (W × D × H × T): 212 × 186 × 146 × 42 mm
- Operating humidity: 10-95%
- Operating temperature: -10 to +45°C (+14 to 113°F)
- Storage temperature: -30 to +70°C (-22 to +158°F)

Management

- Configuration: browser/phone/auto-provision
- Auto provision via FTP/TFTP/HTTP/HTTPS for mass deploy
- Auto-provision with PnP
- Zero-sp-touch, TR-069
- Phone lock for personal privacy protection
- Reset to factory, reboot
- Package tracing export, system log

Network and Security

- SIP v1 (RFC2543), v2 (RFC3261)
- Call server redundancy supported
- NAT traversal: STUN mode
- Proxy mode and peer-to-peer SIP link mode
- IP assignment: static/DHCP
- HTTP/HTTPS web server
- Time and date synchronization using SNTP
- UDP/TCP/DNS-SRV (RFC 3263)
- QoS: 802.1p/Q tagging (VLAN), Layer 3 ToS DSCP
- SRTP for voice
- Transport Layer Security (TLS 1.3)
- HTTPS certificate manager
- AES encryption for configuration file (AES256)
- Digest authentication
- OpenVPN, IEEE802.1X, L2TP VPN
- IPv6
- LLDP/CDP/DHCP VLAN
- ICE
- WPA2/WPA3
- Secure boot
- GARP (Generic Attribute Registration Protocol)

Package Features

- Package content:
  - Yealink SIP-T34W IP phone
  - Handset with handset cord
  - Ethernet Cable (optional)
  - Stand (not applicable to US wall plate Standard)
  - Quick Start Guide
  - Power Adapter (optional)
- Qty/CTN: 10 PCS
- N.W/CTN: 10.286 kg
- G.W/CTN: 11.236 kg
- Giftbox size: 238 × 210 × 103 mm
- Carton Meas: 535 × 443 × 250 mm

Compliance

CE FC REACH ISO 9001

3CX broadsoft metaswitch

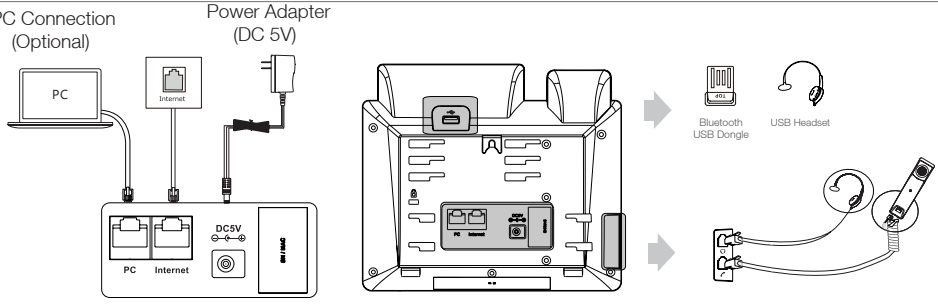

Learn More

To find out how Yealink solutions can help your organization, visit us at www.yealink.com or mail to sales@yealink.com.

About Yealink

Yealink (Stock Code: 300628) is a global-leading provider of Unified Communication & Collaboration Solutions specialized in video conferencing, voice communications, and collaboration, dedicated to helping every person and organization embrace the power of "Easy Collaboration, High Productivity".

With best-in-class quality, innovative technology, and user-friendly experiences, Yealink is one of the best providers in more than 140 countries and regions, ranks No.1 in the global market share of IP Phone, and is the Top 5 leader in the video conferencing market (Frost & Sullivan, 2021).

For more information about Yealink, click here.

Copyright

Copyright © 2023 YEALINK(XIAMEN) NETWORK TECHNOLOGY CO., LTD.
All rights reserved. No parts of this publication may be reproduced or transmitted in any form or by any means, electronic or mechanical, photocopying, recording, or otherwise, for any purpose, without the express written permission of Yealink(Xiamen) Network Technology CO., LTD.

Technical Support

Visit Yealink WIKI (http://support.yealink.com/) for firmware downloads, product documents, FAQ, and more. For better service, we sincerely recommend you to use Yealink Ticketing system (https://ticket.yealink.com) to submit all your technical issues.

YEALINK(XIAMEN) NETWORK TECHNOLOGY CO.,LTD.
Web: www.yealink.com
Addr: No.666 Hu'an Rd,Huli District Xiamen City, Fujian, P.R.C
Copyright©2023 Yealink Inc. All rights reserved.