

Image may differ from product. See technical specification for details.

FYTB 17 FM

Oval flanged ball bearing unit with eccentric locking, cast iron housing, ISO

These oval flanged ball bearing units are compliant with ISO standards. They consist of an insert bearing, with a narrow inner ring and eccentric locking, and are intended primarily for use in applications where the direction of rotation is constant. The bearing is mounted in a cast iron housing, which can be bolted to a machine wall or frame. Ball bearing units can

accommodate moderate initial misalignment, but normally do not permit axial displacement.

- Resist high levels of contamination
- Designed for high temperatures and speeds
- Accommodate relatively heavy loads
- Cost-effective

Overview

Dimensions

Attachment bolt diameter	10 mm
Shaft diameter	17 mm
Housing overall width	26 mm
Width, total	39.1 mm
Centre distance between bolt holes	76.5 mm
Bearing width, total	28.6 mm

Performance

Basic dynamic load rating	9.56 kN
Basic static load rating	4.75 kN
Limiting speed	9 500 r/min
Note	Limiting speed with shaft tolerance h6

Properties

Housing type	Flanged
Flanged housing type	Oval
Number of bolt holes for fasteners	2
Fastening bolt hole type	Plain
Retaining feature, inner ring	Eccentric collar
Bore type	Cylindrical
Rubber seating ring	Without
Material, housing	Cast iron
Material, bearing	Bearing steel
Coating	Without
Sealing, bearing	Seal on both sides
Sealing type	Contact, standard
Sealing, unit	Without
Lubricant	Grease
Relubrication hole	With
Grease fitting	With

Logistics

Product net weight	0.332 kg
eClass code	23-05-08-02
UNSPSC code	31171536

Technical specification

Compliance with standard	ISO
Purpose specific	For material handling applications
Material, housing	Cast iron
Sealing, bearing	Seal on both sides
Sealing type, bearing	Contact, standard
Sealing, unit	Without
Coating	Without

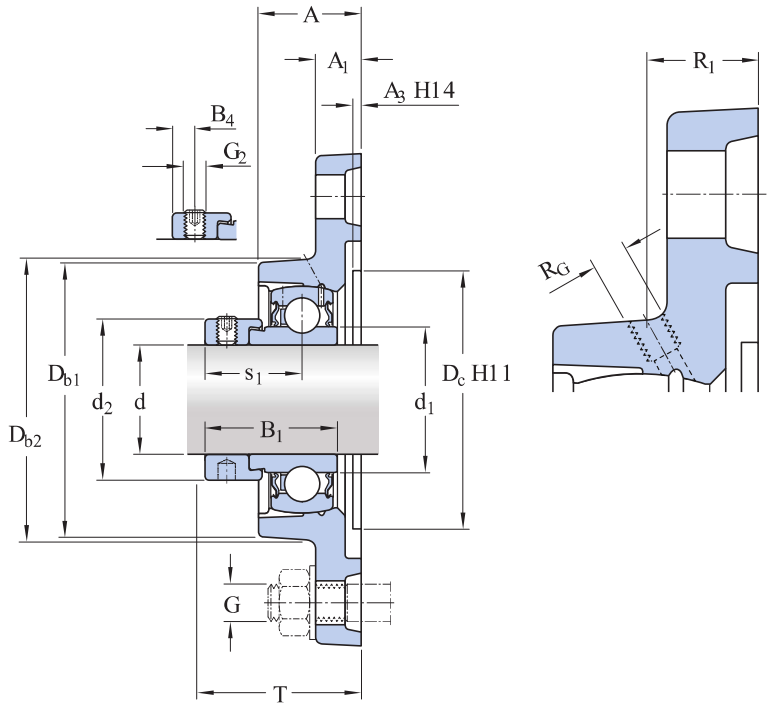

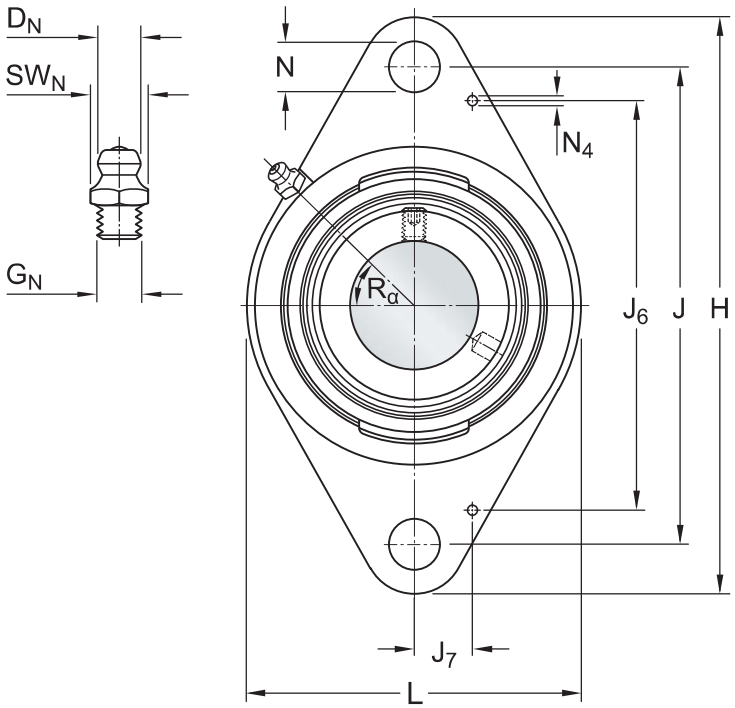

Dimensions

d	17 mm	Bore diameter
d_1	≈ 24.2 mm	Outer diameter of inner ring
d_2	27.2 mm	Outside diameter of locking ring
A	26 mm	Width of housing
A_1	11 mm	Flange width
A_3	3.2 mm	Depth of centring recess
B	19.1 mm	Width of inner ring
B_1	28.6 mm	Overall bearing width
B_4	4.75 mm	Distance from locking device side face to thread centre
D_{b1}	50 mm	Top external diameter
D_{b2}	57 mm	Base external diameter
D_c	50.8 mm	Diameter of housing centering recess
H	98.5 mm	Overall height
J	76.5 mm	Centre distance between bolt holes
L	57 mm	Overall length
N	11.5 mm	Diameter of attachment bolt hole
s_1	22.1 mm	Distance from locking device side face to raceway centre

T	39.1 mm	Overall width

GREASE FITTING

D_N	6.5 mm	Diameter of head sphere of grease fitting
SW_N	7 mm	Hexagonal key size for the grease fitting
G_N	1/4-28 SAE-LT	Thread of grease fitting

DOWEL PINS

J_6	61.5 mm	Distance of dowel pins
J_7	11 mm	Axial offset of dowel pins
N_4	2 mm	Recommended diameter for dowel pins

THREADED HOLE

R_G	1/4-28 UNF	Housing thread for grease fitting
R_1	19 mm	Axial position of the housing thread
R_α	45 °	Angular position of the housing thread

Calculation data

Basic dynamic load rating	C	9.56 kN
Basic static load rating	C_0	4.75 kN
Fatigue load limit	P_u	0.2 kN
Limiting speed		9 500 r/min
		Limiting speed with shaft tolerance h6

Mounting information

Set screw	G_2	M6x0.75
Hexagonal key size for set screw		3 mm

Recommended tightening torque for set screw		4 N·m
Recommended diameter for attachment bolts, mm	G	10 mm
Recommended diameter for attachment bolts, inch	G	0.375 in

Tolerances and clearances

The values depend on the included bearing:

- Bore diameter tolerance → table 1
- Radial internal clearance → table 2
- Recommended fit → table 3
- Shaft tolerance → table 4

Compatible products

Component

Oval flanged housing for insert bearings, cast iron	FYTB 503 M
Insert bearing with an eccentric locking collar and narrow inner ring	YET 203

More Information

Product details

- Flanged units to ISO standards
- Flanged units to North American standards
- Flanged units to Japanese Industrial Standards (JIS)
- Flanged units, not standardized (SKF Food Line)
- Permissible misalignment
- Locating/non-locating support
- Loads
- Temperature limits
- Permissible speed
- Lubrication
- Mounting and dismounting
- Ordering information
- Designation system

Engineering information

- Principles of ball bearing units selection and application - Download catalogue (4.9 MB)
- Principles of selecting mounted bearing solutions
- Bearing failure and how to prevent it

Tools

- SKF Product select
- Bearing Frequency Calculator

Terms of use

By accessing and using this website / app owned and published by AB SKF (publ.) (556007-3495 · Gothenburg) (“SKF”), you agree to the following terms and conditions:

Warranty Disclaimer and Limitation of Liability
Although every care has been taken to assure the accuracy of the information on this website / app, SKF provides this information "AS IS" and DISCLAIMS ALL WARRANTIES, EXPRESS OR IMPLIED, INCLUDING, BUT NOT LIMITED TO, IMPLIED WARRANTIES OF MERCHANTABILITY AND FITNESS FOR A PARTICULAR PURPOSE. You acknowledge that your use of this website / app is at your sole risk, that you assume full responsibility for all costs associated with use of this website / app, and that SKF shall not be liable for any direct, incidental, consequential, or indirect damages of any kind arising out of your access to, or use of the information or software made available on this website / app.

Any warranties and representations in this website / app for SKF products or services that you purchase or use will be subject to the agreed upon terms and conditions in the contract for such product or service.

Further, for non-SKF websites / apps that are referenced in our website / app or where a hyperlink appears, SKF makes no warranties concerning the accuracy or reliability of the information in these websites / apps and assumes no responsibility for material created or published by third parties contained therein. In addition, SKF does not warrant that this website / app or these other linked websites / apps are free from viruses or other harmful elements.

Third Party Services
When viewing YouTube content via the SKF website(s) (i.e. using YouTube API Services), you agree to be bound by the YouTube Terms of Service.

Copyright
Copyright in this website / app copyright of the information and software made available on this website / app rest with SKF or its licensors. All rights are reserved. All licensed material will reference the licensor that has granted SKF the right to use the material. The information and software made available on this website / app may not be reproduced, duplicated, copied, transferred, distributed, stored, modified, downloaded or otherwise exploited for any commercial use without the prior written approval of SKF. However, it may be reproduced, stored and downloaded for use by individuals without prior written approval of SKF. Under no circumstances may this information or software be supplied to third parties.

This website /app includes certain images used under license from Shutterstock, Inc.

Trademarks and Patents
All trademarks, brand names, and corporate logos displayed on the website / app are the property of SKF or its licensors, and may not be used in any way without prior written approval by SKF. All licensed trademarks published on this website / app reference the licensor that has granted SKF the right to use the trademark. Access to this website / app does not grant to the user any license under any patents owned by or licensed to SKF.

Changes
SKF reserves the right to make changes or additions to this website / app at any time.