Field-Attachable Connectors

BCC M445-0000-1A-000-41X575-000
Order Code: BCC06ZH

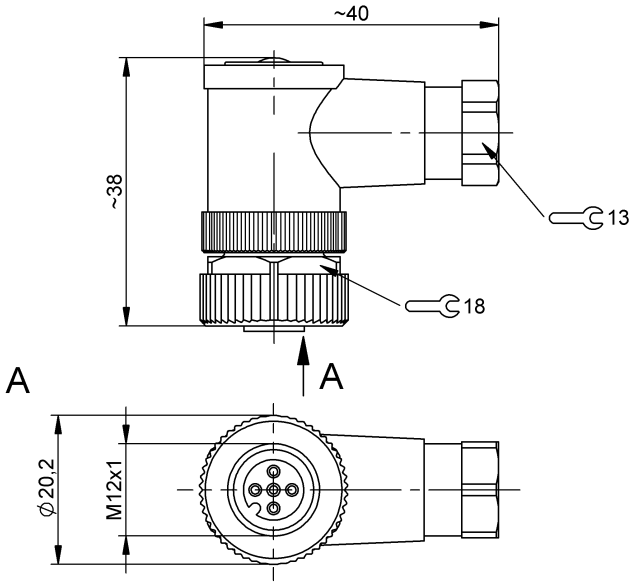

Basic features

Approval/Conformity	CE cURus EAC WEEE

Electrical connection

Cable diameter D	4...6 mm
Connection	M12x1-Female, angled, 5-pin, A-coded
Number of connectable contacts	5
System	Can be fabricated

Electrical data

Operating voltage Ub	125 VDC / 125 VAC
Rated current (40 °C)	4.0 A

Environmental conditions

Ambient temperature	-40...85 °C
IP rating	IP67

Material

Material contact carrier	PA
Material contacts	Brass
Material cover nut	Die-cast zinc
Material grip	PA

Mechanical data

Connection cross-section	0.14...0.75 mm²
Tightening torque pigtail	0.6 Nm
Type of wire mounting	Screw terminals

Remarks

Enclosure rating per IEC 60529, only in screwed state with the associated mating piece.

Connector Drawings

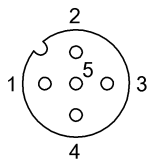

PIN 1-5 usable