25000N series

Professional slide switches



DISTINCTIVE FEATURES

Professional grade slide switches for PC boards
Approved according to UL 1054
Wave solderable
Available with flush, high and side actuator
Various actuator lengths



ELECTRICAL SPECIFICATIONS

- Max. current/voltage rating with resistive load :
  - silver contacts (A) : 1 A 30 VDC
  - gold plated brass contacts (LD) : 100 mA 30 VDC
- Minimum load :
  - silver contacts (A) : 100 mA 10 V
  - gold plated brass contacts (LD) : 10 µA 5 VDC - 10 mA 50 mV
- Initial contact resistance :
  - silver contacts (A) : 10 mΩ max.
  - gold plated brass contacts (LD) : 50 mΩ max.
- Insulation resistance : 1,000 MΩ min. at 500 VDC
- Dielectric strength :
  1,000 Vrms 50 Hz min. between terminals
  2,000 Vrms 50 Hz min. between poles
  2,000 Vrms 50 Hz min. between terminals and frame
- Electrical life : 10,000 cycles at full load
- Low level or mechanical life : 20,000 cycles

GENERAL SPECIFICATIONS

- Operating temperature : -40 °C to +85 °C (-40 °F to +185 °F)
- Overall length : 14 mm (.551)
- Actuator height (outside case) :
  - high : 2.80 mm (.110)
  - extra high : 6 mm (.236)
  - side : 2.30 mm (.090)
  - long side : 6 mm (.236)
- Travel : 4 mm (.157)

The company reserves the right to change specifications without notice.

25000N series

Professional slide switches

MATERIALS

- Case : PBT
- Actuator : polyamide, glass filled
- Cover : polyamide, glass filled
- Contacts
  A : silver
  LD : brass, gold plated
- Terminal seal : epoxy

APEM products may be recycled at end-of-life for the re-claiming of valuable metal components.

AGENCY APPROVAL

2 A 250 VAC
4 A 125 VAC

Availability : consult factory for details of approved models.
Marking : to order switches marked UL, complete the "Options and Approvals" box of ordering format.

ELECTRICAL FUNCTIONS



PCB MOUNTING

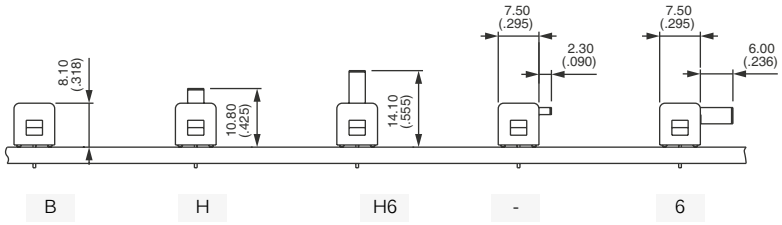

POSITIONS AND CONNECTIONS

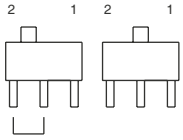

Function 6 : ON - ON
Function 9 : ON OFF ON

25000N series

Professional slide switches

BUILD YOUR PART NUMBER

BASIC PART NUMBER

25	___	___	___	N
SERIES	ACTUATOR AND TERMINALS	NUMBER OF POLES	ELECTRICAL FUNCTIONS	VERSION

ACTUATOR AND TERMINALS

1	Flush or high actuator, terminal spacing 2.54 (.100)
4	Flush or high actuator, terminal spacing 5.08 (.200)
3	Side actuator, terminal spacing 2.54 (.100)
5	Side actuator, terminal spacing 5.08 (.200)

NUMBER OF POLES

3	Single pole
4	Double pole

ELECTRICAL FUNCTIONS

6	ON	-	ON
9	ON	OFF	ON

VERSION

N	For all models

OPTIONS

___	___	___
CONTACT MATERIALS	ACTUATOR	OPTIONS AND APPROVALS

CONTACT MATERIALS

A	Silver
LD	Gold plated brass

ACTUATOR

B	Flush
H	High
H6	Extra high
Blank	Side
-6	Long side

OPTIONS AND APPROVALS

X601	Special contact : lower rating
X603	Flame retardant plastic material
X693UL	UL approved and marked

Model with tape & reel packaging : see last page.

ABOUT THIS SERIES

On the following pages, you will find successively basic part numbers of switches and options in the same order as in above chart.

Notice : please note that not all combinations of above numbers are available. Refer to the following pages for further information.

25000N series

Professional slide switches

FLUSH ACTUATOR : 25000NB



Terminal spacing 2.54 (.100)		Terminal spacing 5.08 (.200)	
Single pole		Single pole	
25136N B		25436N B	
25139N B		25439N B	
Double pole		Double pole	
25146N B		25446N B	
25149N B		25449N B	

Shown with 2.54 mm terminal spacing

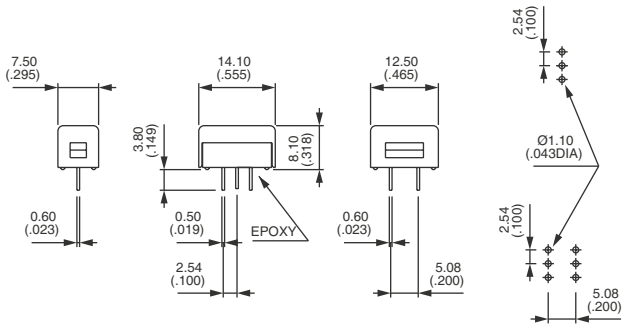

HIGH ACTUATOR : 25000NH



Terminal spacing 2.54 (.100)		Terminal spacing 5.08 (.200)	
Single pole		Single pole	
25136N H		25436N H	
25139N H		25439N H	
Double pole		Double pole	
25146N H		25446N H	
25149N H		25449N H	

Shown with 5.08 mm terminal spacing

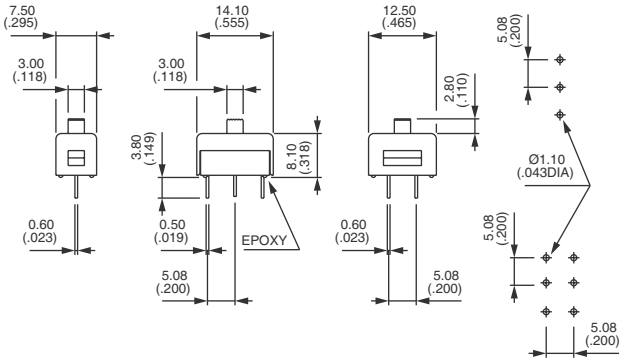

EXTRA HIGH ACTUATOR : 25000NH6



Terminal spacing 2.54 (.100)		Terminal spacing 5.08 (.200)	
Single pole		Single pole	
25136N H6		25436N H6	
25139N H6		25439N H6	
Double pole		Double pole	
25146N H6		25446N H6	
25149N H6		25449N H6	

Shown with 5.08 mm terminal spacing

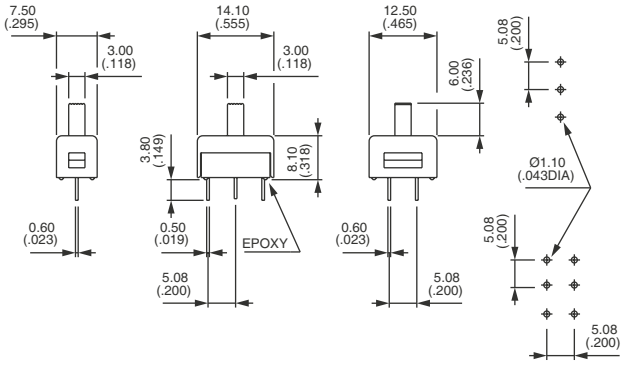

SIDE ACTUATOR : 25000N



Terminal spacing 2.54 (.100)		Terminal spacing 5.08 (.200)	
Single pole		Single pole	
25336N		25536N	
25339N		25539N	
Double pole		Double pole	
25346N		25546N	
25349N		25549N	

Shown with 2.54 mm terminal spacing

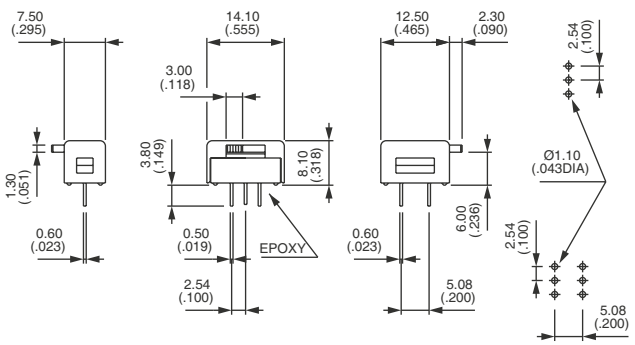

25000N series

Professional slide switches

LONG SIDE ACTUATOR : 25000N-6



Terminal spacing 2.54 (.100)	Terminal spacing 5.08 (.200)
Single pole	Single pole
25336N -6	25536N -6
25339N -6	25539N -6
Double pole	Double pole
25346N -6	25546N -6
25349N -6	25549N -6

Shown with 2.54 mm terminal spacing

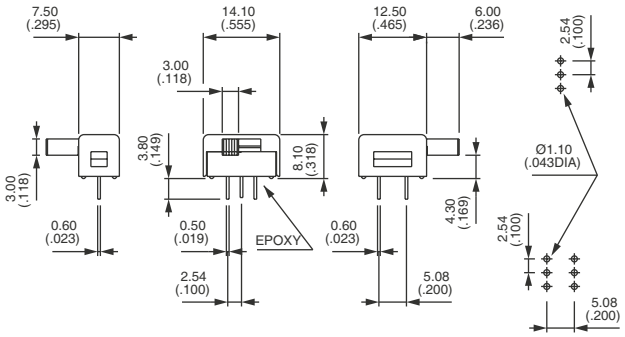

CONTACT MATERIALS

BASIC P/N

A	Silver
LD	Brass, gold plated

ACTUATORS

BASIC P/N

Already included in the above part numbers.

B	Flush actuator
H	High actuator
H6	Extra high
Blank	Side
-6	Long side

OPTIONS AND APPROVALS

BASIC P/N

X601	Silver plated brass contacts - Lower rating 3 VA 30 VDC. Min. quantity : 5,000 pieces per model and shipment.
X693	Flame retardant plastic materials
X693UL	Switches approved and marked UL (silver contacts only)

MODEL WITH TAPE AND REEL PACKAGING



25436NLDH X693-02 R

On request.