SCHEMATIC

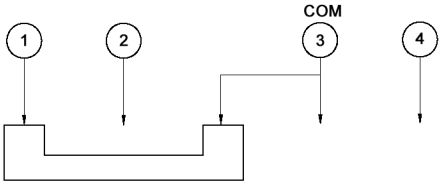

P.C.B. LAYOUT

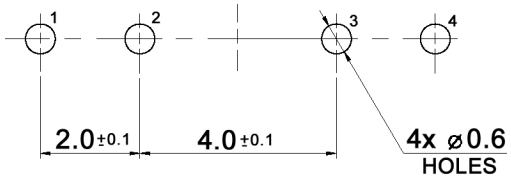

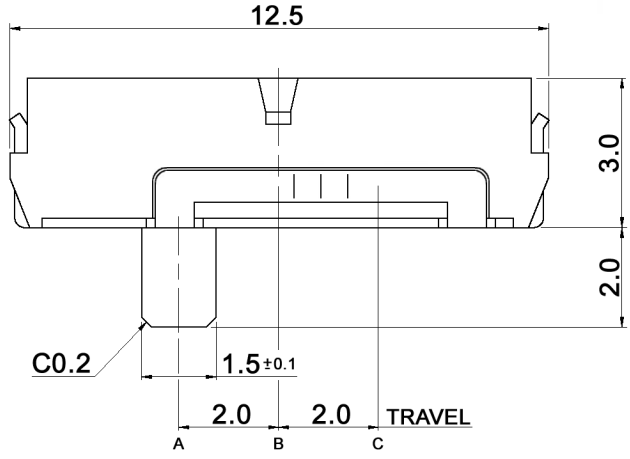

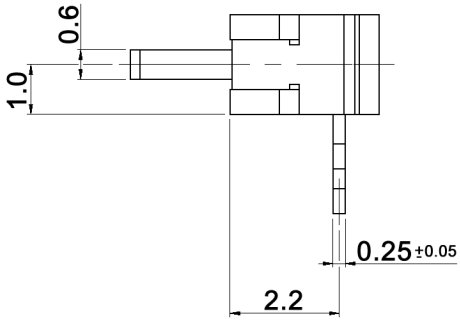

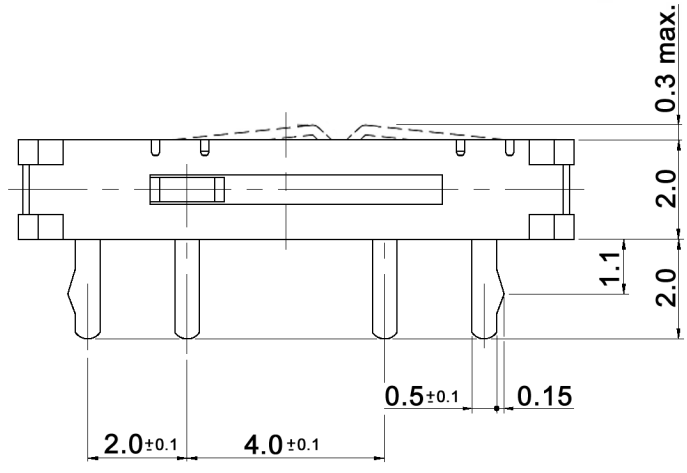

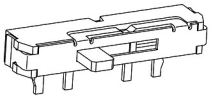

Specifications:

Contact rating:	0.3A, 4V DC
Contact resistance:	70mOhm max.
Insulation resistance:	100MOhm min. at 500V DC for 1 minute +/-5sec.
Dielectric strength:	500V AC (50/60Hz, 2mA) for 1 minute
Operating temperature:	-40°C to +85°C
Mechanical life:	10 000 cycles
Operating force:	A-B C-B: 120 +/-75gf B-A B-C: 150 +/-100gf
Soldering conditions:	pre-heat: max. 100°C, max. 60sec. soldering: max. 260°C, max. 3-5sec.
Material:	Contact / terminal: copper alloy, silver plated Frame: liquid crystal polymer, black Slider: polyamide, white Cover: stainless steel

RoHS-conform · 2002 / 95 / EC

Tolerances: ±0.20mm			Date	Name	MMP 134-R
			09/13	dr	
			knitter-switch		30 29 13
					Page 1/1
Modifications	Date	Name			