Accessories to TA45



AZZ71



AZZ04



AZZ31, AZZ61

See below:
**Approvals and Compliances**

## Description

- Covers for IP54 or IP65
- Locking device
- Flat gaskets
- Raised collar

## Weblinks

pdf data sheet, html datasheet, General Product Information, Distributor-Stock-Check, Detailed request for product, Product News

## Approvals and Compliances

Detailed information on product approvals, code requirements, usage instructions and detailed test conditions can be looked up in Details about Approvals

SCHURTER products are designed for use in industrial environments. They have approvals from independent testing bodies according to national and international standards. Products with specific characteristics and requirements such as required in the automotive sector according to IATF 16949, medical technology according to ISO 13485 or in the aerospace industry can be offered exclusively with customer-specific, individual agreements by SCHURTER.

## Application standards

Application standards where the product can be used

| Organization | Design | Standard | Description |
|---|---|---|---|
| IEC | Suitable for applications acc. | IEC/UL 62368-1 | Audio/video, information and communication technology equipment - Part 1: Safety requirements |

## Compliances

The product complies with following Guide Lines

| Identification | Details | Initiator | Description |
|---|---|---|---|
| REACH | REACH | SCHURTER AG | On 1 June 2007, Regulation (EC) No 1907/2006 on the Registration, Evaluation, Authorization and Restriction of Chemicals 1 (abbreviated as "REACH") entered into force. |

**Dimension [mm]**

AZZ04

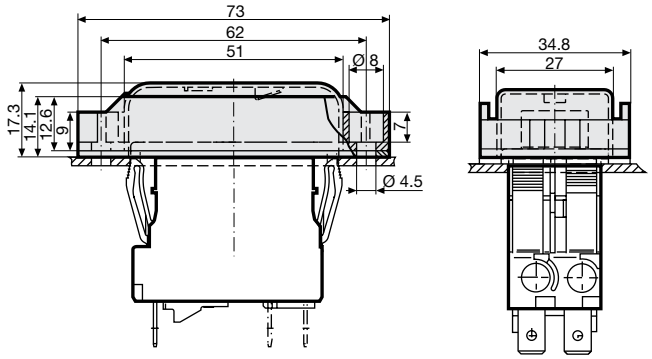


AZZ05

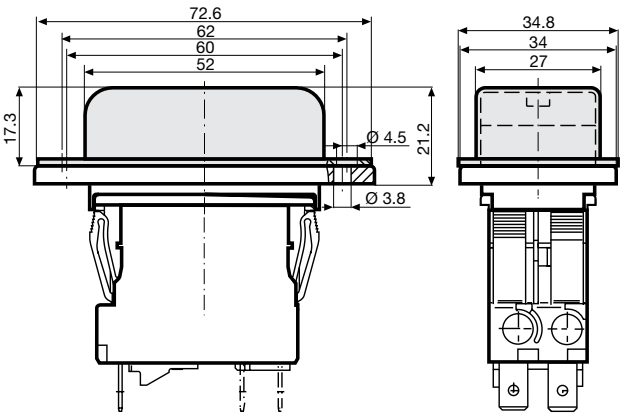


AZZ51

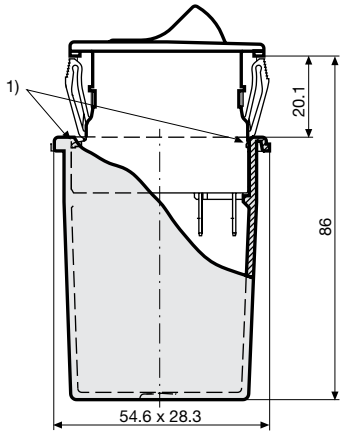


Snap-on fastener

AZZ71

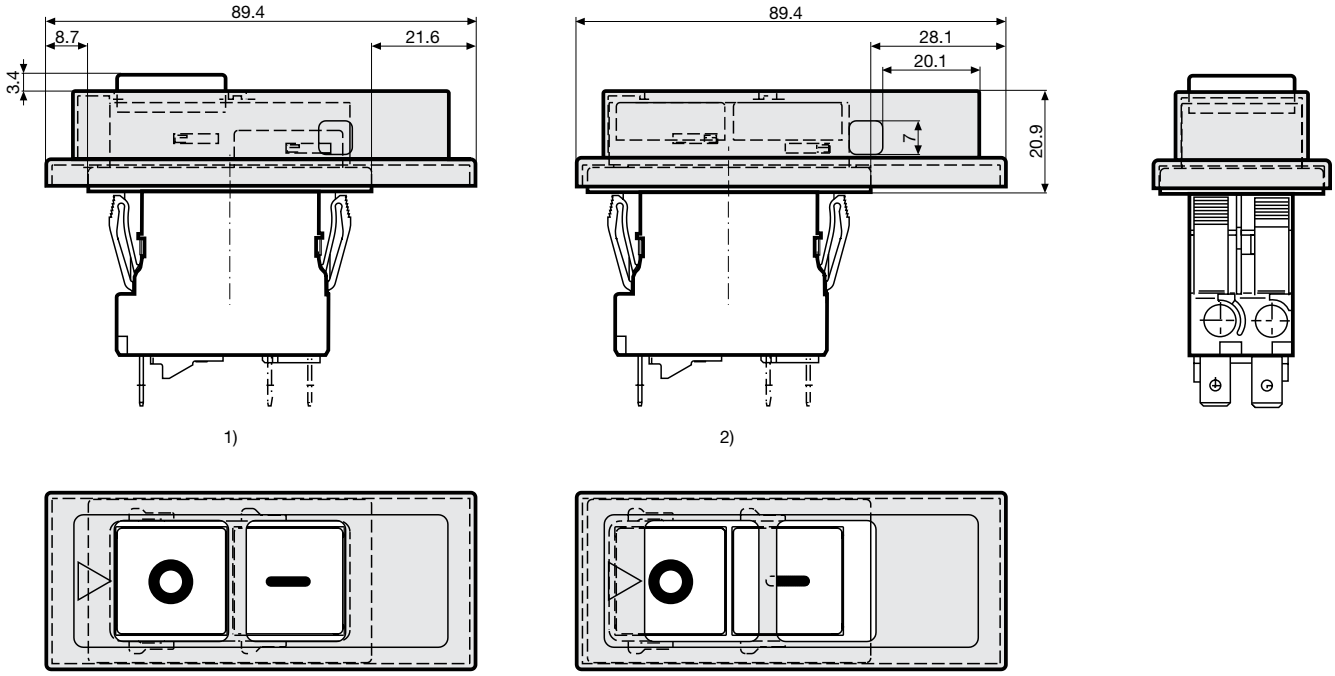


1) CBE switchable
2) CBE not switchable

## All Variants

| Suitable for | Type | Designation | Poles | Degree of Protection | Mounting | Order Number |
|---|---|---|---|---|---|---|
| TA45 2 pole Push button | CBE TA45-AZZ71 | Locking device black, safety-lock type | 2-pole | - | Snap-in version | 4430.1625 |
| TA45 2 pole Push button, TA45 2 pole Rocker | CBE TA45-AZZ51 | Rear cover | 2-pole | IP40 | Snap-in or flange mounted | 4430.0519 |
| TA45 2 pole Push button | CBE TA45-AZZ61 | Flat gasket | 2-pole | IP54 | Snap-in version | 4430.0499 |
| TA45 2 pole Rocker | CBE TA45-AZZ31 | Flat gasket | 2-pole | IP54 | Snap-in version | 4430.0685 |
| TA45 2 pole Rocker | CBE TA45-AZZ04 | Screw-on cover with collar | 2-pole | IP65 | Snap-in version | 4430.0695 |
| TA45 2 pole Push button, TA45 3 pole Push button | CBE TA45-AZZ05 | Screw-on cover | 2 or 3 pole | IP65 | Flange type | 4430.0835 |

Order numbers 4430.1625 / 4430.0519 / 4430.0499 do not apply to variants with auxiliary contact.

Most Popular.

Availability for all products can be searched real-time:https://www.schurter.com/en/Stock-Check/Stock-Check-SCHURTER

**Packaging Unit** 1 Pcs

13.04.2022

The specifications, descriptions and illustrations indicated in this document are based on current information. All content is subject to modifications and amendments. Information furnished is believed to be accurate and reliable. However, users should independently evaluate the suitability and test each product selected for their own applications.