E43380

Coupling plate for level sensors

LAUNCHING PLATE G3/4

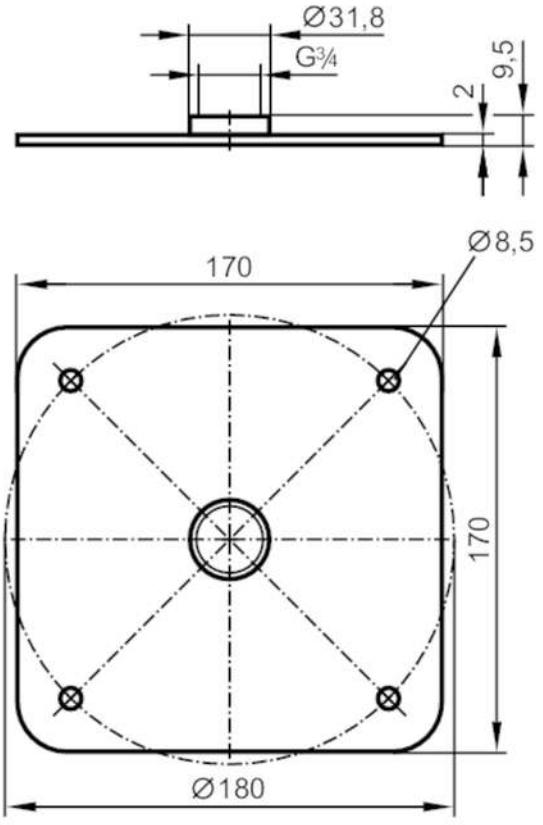

Application		
Design		for level sensors LR
Tank pressure	[bar]	-1...16
Mechanical data		
Weight	[g]	627.5
Materials		stainless steel (1.4571/316Ti)
Tightening torque	[Nm]	6...9
Sensor connection		G 3/4
Remarks		
Pack quantity		1 pcs.