182.72.104.66NU2..-EZylinderrollenlager

Cylindrical roller bearings

NU209-E-XL-TVP2 (Series NU2..-E)

main dimensions to DIN 5412-1, non-locating bearing, separable, with cage

The datasheet is only an overview of dimensions and basic load ratings of the selected product. Please always observe all the guidelines in these overview pages. Further information is given on many products under the menu item "Description". You can also order comprehensive information via the Catalogue selection system (https://www.schaeffler.de/content.schaeffler.de/en/news_media/index.jsp) or by telephone on +49 (91 32) 82 - 28 97.

d	45	mm	
D	85	mm	
B	19	mm	
D_1	73,3	mm	
$D_{a\ max}$	78	mm	
$d_{a\ max}$	54	mm	
$d_{a\ min}$	52	mm	
$d_{b\ min}$	57	mm	
E	76,5	mm	
F	54,5	mm	
$r_{1\ min}$	1,1	mm	
$r_{a1\ max}$	1	mm	
$r_{a\ max}$	1	mm	
r_{min}	1,1	mm	
s	1	mm	Axial displacement facility from central position
m	0,434	kg	Mass
C_r	72000	N	Basic dynamic load rating, radial

C_{0r}	63000	N	Basic static load rating, radial
n_G	10200	1/min	Limiting speed
n_B	7000	1/min	Reference speed
C_{ur}	8100	N	Fatigue limit load, radial

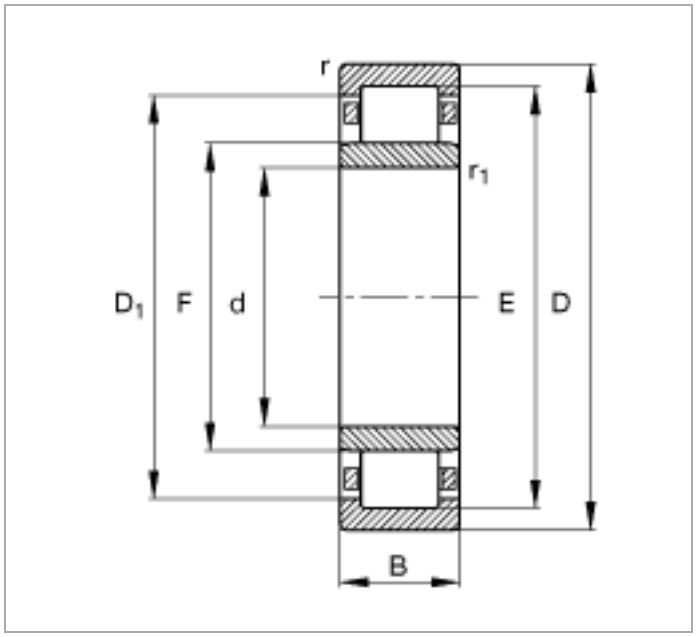

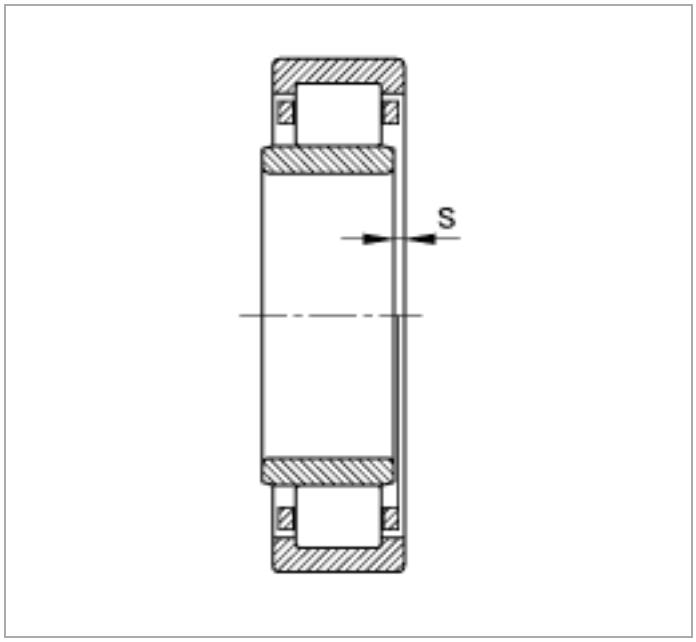

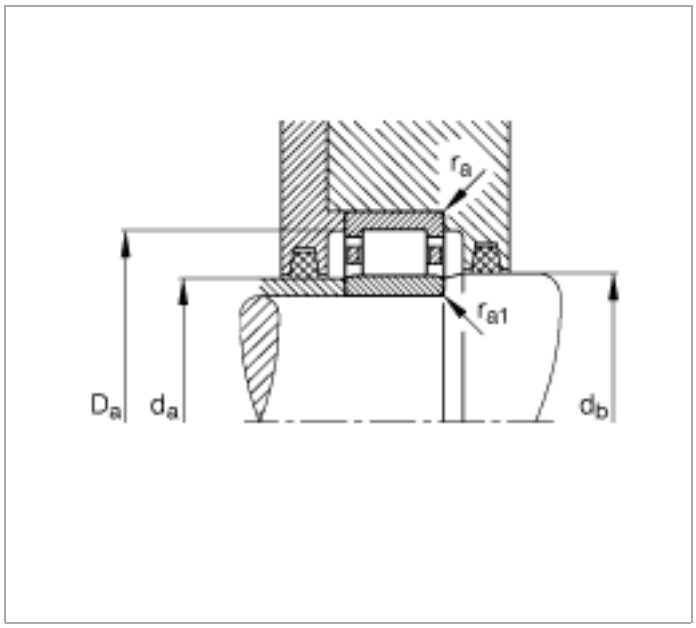
r_a
r_{a1}
D_a
d_a
d_b