Catalogue

Softstarters

Type PSR

Catalogue 1SFC132003C0201, edition 2 September 2006

Adjusted in October 2006

New Smart Softstarter



(1SFC132152F001)

ABB

Clearwater Tech - Phone: 800.894.0412 - Fax: 208.368.0415 - Web: www.clrwtr.com - Email: info@clrwtr.com

ABB Softstarters
General



To the left: A combination with PSR and a manual Motor Starter MS116
Above: PSR16, PSR30 and PSR 45 *)

ABB Automation Products serves customer worldwide and has long experience and comprehensive know-how of the developement and production of softstarters.

After the PSS and the PST(B) ranges, it is now time to introduce the small compact PSR Softstarter - *a real smart starter*.

The Softstarter is the solution to both mechanical and electrical problems.

Constant-speed AC motors are the workhorses of industry; they are used to drive fans, pumps, conveyors and lots of other types of machinery. These motors are tough machines, but they have some drawbacks. During start and stop both mechanical and electrical stresses are high, causing undesirable load peaks each time the motors are started. An ABB Softstarter eliminates many of these problems. The voltage is smoothly applied to, and removed from, the motor. Both the torque and the current consequently behave in the same way. The result is that mechanical and electrical stresses are significantly lower than with conventional starting methods.

Fewer electrical problems
The starting current will be significantly lower than with direct on line (DOL) starting and compared with Y/D starters the switching transients will be eliminated.

Fewer mechanical problems
Sliding drive belts and gearbox wear caused by heavy torque peaks are familiar problems that require lots of maintenance. PSR Softstarter reduce the torque peaks as the apply the torque smoothly.

Fewer operational problems
Pressure surges in pipelines are often called water hammer. It is a common but undesirable effect when stopping almost all pumps. PSR Softstarters allow smooth stops and reduce the problems associated with water hammer.

ABB softstarters -Advanced, Flexible and Compact Range

ABB offers three different ranges of softstarter to cover every customer need for solutions for small to medium-sized motor applications.

PST(B) - Advanced range, covers motor currents from 30 to 1050 A and provides advanced functionality, including integrated protections, programmable signal relays, a flexible communication system and an LCD display. Sizes PSTB370 to 1050 A include a by-pass contactor.

PSS - Flexible range covers motor currents from 18 to 300 A and offers a flexible solution with easy installation and setup. It can also be connected in-line or inside delta.

Softstarters type PST(B) and PSS are described in Catalogue 1SFC132001C0201

PSR - Compact range, covers motor currents from 3 to 45 A. It is the latest addition to the softstarter family and has an attractive, compact design. Further, the system concept includes MMS and the softstarters are available for remote control connection using the FieldBusPlug as an accessory. All sizes include a Run signal relay, while from sizes 25 A the PSR Softstarters are also provided with an output signal for TOR (Top Of Ramp), i.e. full voltage). With standard performance the PSR Softstarters handle ten starts per hour. When an auxiliary cooling fan is added, the starting capacity is increased to 20 starts per hour.

- Current ratings 3.9 – 45 A (1.5 - 22 kW)
- Motor voltage 208 – 600 V
- Supply voltage 24 V DC or 100-240 V AC
- Easy to install and adjust
- DIN rail or screw mounting

With their compact design, the PSR Softstarters are ideal for installation in places where space is limited and where there is a demand for easy installation.

PSR Softstarter - a *smart* softstarter.

*) In the background an application example, a snow cannon from Lenko Snow, Sweden

PSR3 ... PSR45

Ordering details



PSR3 ... PSR16



PSR25, PSR30



PSR37 ... PSR45

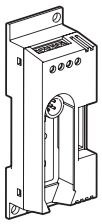

PSR-FBPA

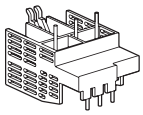

PSR16-MS116



PSR-FAN



Motor power 230 V P_e kW	Motor power 400 V P_e kW	Motor power 500 V P_e kW	IEC Max rated motor current, I_e A	Type	Order code	Weight kg 1 piece
208 – 600 V AC						
Supply voltage 100-240 V AC						
0.75	1.5	2.2	3.9	**PSR3-600-70**	**1SFA 896 103 R7000**	0.45
1.5	3	4	6.8	**PSR6-600-70**	**1SFA 896 104 R7000**	0.45
2.2	4	4	9	**PSR9-600-70**	**1SFA 896 105 R7000**	0.45
3	5.5	5.5	12	**PSR12-600-70**	**1SFA 896 106 R7000**	0.45
4	7.5	7.5	16	**PSR16-600-70**	**1SFA 896 107 R7000**	0.45
5.5	11	15	25	**PSR25-600-70**	**1SFA 896 108 R7000**	0.65
7.5	15	18.5	30	**PSR30-600-70**	**1SFA 896 109 R7000**	0.65
7.5	18.5	22	37	**PSR37-600-70**	**1SFA 896 110 R7000**	1.00
11	22	30	45	**PSR45-600-70**	**1SFA 896 111 R7000**	1.00
Supply voltage 24 V DC						
0.75	1.5	2.2	3.9	**PSR3-600-81**	**1SFA 896 103 R8100**	0.45
1.5	3	4	6.8	**PSR6-600-81**	**1SFA 896 104 R8100**	0.45
2.2	4	4	9	**PSR9-600-81**	**1SFA 896 105 R8100**	0.45
3	5.5	5.5	12	**PSR12-600-81**	**1SFA 896 106 R8100**	0.45
4	7.5	7.5	16	**PSR16-600-81**	**1SFA 896 107 R8100**	0.45
5.5	11	15	25	**PSR25-600-81**	**1SFA 896 108 R8100**	0.65
7.5	15	18.5	30	**PSR30-600-81**	**1SFA 896 109 R8100**	0.65
7.5	18.5	22	37	**PSR37-600-81**	**1SFA 896 110 R8100**	1.00
11	22	30	45	**PSR45-600-81**	**1SFA 896 111 R8100**	1.00

Accessories

Description	Type	Order code	Weight kg 1 piece
Fieldbus Plug Connection Accessory The same accessory for all sizes	**PSR-FBPA**	**1SFA 896 312 R1001**	0.06
Connection kit PSR3-16 and MS116	**PSR16-MS116**	**1SFA 896 211 R1001**	0.03
Connection kit PSR37-45 and MS450	**PSR45-MS450**	**1SFA 896 213 R1001**	0.03
Fan All sizes can be equipped with auxiliary cooling fan for increased starting capacity.	**PSR-FAN**	**1SFA 896 311 R1001**	0.01
ABB Field Bus Plug The same accessory for all sizes, see Catalogue 1SFC132001C0201, May 2005 or later revisions.			

PSR3 ... PSR45

Technical data

Technical data

Rated insulation voltage, U_i		600 V								
Rated operational voltage, U_e		208...600 V								
Rated supply voltage,U_s		100...240 V AC or 24 V DC								
Rated operational current,I_r		**PSR3**	**PSR6**	**PSR9**	**PSR12**	**PSR16**	**PSR25**	**PSR30**	**PSR37**	**PSR45**
		3.9 A	6.8 A	9 A	12 A	16 A	25 A	30 A	37 A	45 A
Starting capacity at I_r		4 x I_r for 6 sec.								
Number of starts per hour,		standard 10 (4 x I_e during 6 s)								
	with aux. fan	20 (4 x I_e during 6 s)								
Service factor		100 %								
Ambient temperature	during operation [1]	-25 °C to +60 °C								
	during storage	-40 °C to +70 °C								
Maximum altitude [2]	4000 m									
Degree of protection,		**PSR3**	**PSR6**	**PSR9**	**PSR12**	**PSR16**	**PSR25**	**PSR30**	**PSR37**	**PSR45**
	main circuit	IP20	IP20	IP20	IP20	IP20	IP20	IP20	IP10	IP10
	control circuit	IP20	IP20	IP20	IP20	IP20	IP20	IP20	IP20	IP20
Connectable cable area,		**PSR3 - PSR16**					**PSR25 - PSR30**		**PSR37 - PSR45**	
	main circuit	1 x 0.75 - 2.5 mm²					1 x 2.5 - 10 mm²		1 x 6 - 35 mm²	
		2 x 0.75 - 2.5 mm²					2 x 2.5 - 10 mm²		2 x 6 - 16 mm²	
		PSR3 - PSR16					**PSR25 - PSR45**			
	control circuit	1 x 2.5 mm²					1 x 2.5 mm²			
		2 x 2.5 mm²					2 x 1.5 mm²			
Signal relays		**PSR3 - PSR16**					**PSR25 - PSR45**			
for Run signal										
	Resistive load	240 V, 2 A					250 V, 5 A			
	AC-15 (Contactor)	240 V, 0.5 A					250 V, 0.5 A			
for Top of Ramp signal										
	Resistive load	-					250 V, 2 A			
	AC-15 (Contactor)	-					250 V, 0.5 A			
LED for On/Ready		Green								
for Run/Top Of Ramp		Green								
Setting of Start Ramp		1-10 sec.								
Stop Ramp		0-20 sec.								
Initial- and End Voltage		40-70%								

[1] Above 40 °C up to max. 60 °C reduce the rated current with 0.8 % per °C.

[2] When used at high altitudes above 1000 meters up to 4000 meters you need to derate the rated current using the following formula.

$$[\ \%\ \text{of}\ I_e = 100 - \frac{x - 1000}{150}\ ]$$

x = actual altitude for the softstarter

Settings

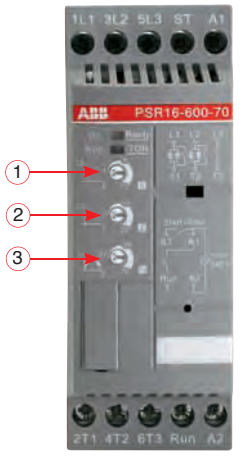

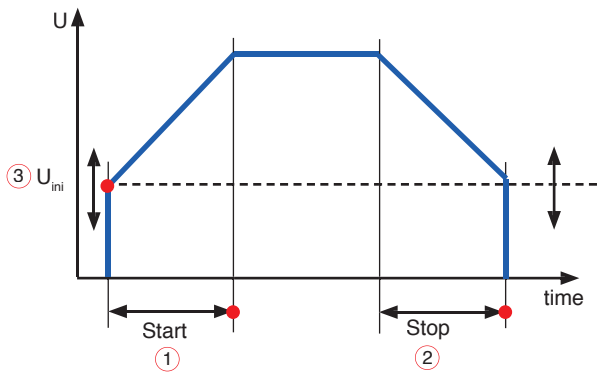

1 Ramp time START = 1 ... 10 sec
2 Ramp time STOP = 0 ... 20 sec
3 Initial voltage U_{ini} =40 ... 70 %
(also set "end voltage")

PSR3 ... PSR45

Technical data

Recommended Starter Combinations at 400 V acc. to IEC60947.

Alternative with Manual Motor Starter

Alternative with gG Fuses

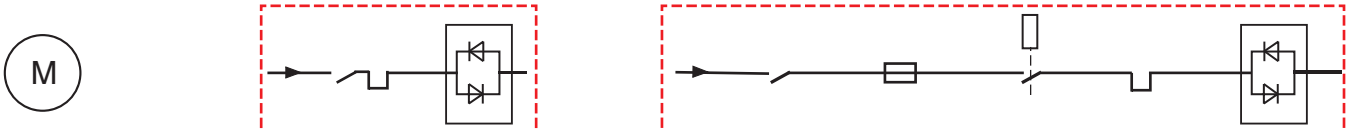

Motor	Max I_e	Manual Motor Starter	Soft-starter	Switch fuse	gG Fuse	Line contactor	Overload protection	Softstarter
kW	A	Type	Type	Type	Type	Type	Type	
1.5	3.9	MS116	PSR3	OS32D	10A gG	A9	TA25DU	PSR3
3	6.8	MS116	PSR6	OS32D	16A gG	A9	TA25DU	PSR6
4	9	MS116	PSR9	OS32D	25A gG	A9	TA25DU	PSR9
5.5	12	MS116	PSR12	OS32D	32A gG	A12	TA25DU	PSR12
7.5	16	MS116	PSR16	OS32D	32A gG	A16	TA25DU	PSR16
11	25	MS325	PSR25	OS32D	50A gG	A26	TA25DU	PSR25
15	30	MS450	PSR30	OS32D	63A gG	A30	TA25DU	PSR30
18.5	37	MS450	PSR37	OS63D	100A gG	A40	TA42DU	PSR37
22	45	MS450	PSR45	OS125D	125A gG	A50	TA75DU	PSR45

UL ratings

Softstarter		Motor power P (hp) and full load current FLA (A)				Max. fuse
		U_e	U_e	U_e	U_e	
Type	FLA	208 V	240 V	480 V	600V	
	A	hp	hp	hp	hp	A, Type
		208 –600 V AC				
		Supply voltage 100-240 V AC alt. 24 V DC				
PSR3	3.4	0.5	0.75	2	2	40 A J-Type
PSR6	6.1	1	1.5	3	5	40 A J-Type
PSR9	9	2	2	5	7.5	40 A J-Type
PSR12	11	3	3	7.5	10	40 A J-Type
PSR16	15.2	3	5	10	10	40 A J-Type
PSR25	24.2	7.5	7.5	15	20	60 A J-Type
PSR30	28	7.5	10	20	25	70 A J-Type
PSR37	34	10	10	25	30	100 A J-Type
PSR45	46.2	15	15	30	40	100 A J-Type

PSR3 ... PSR45

Application diagrams

PSR3 ...16

A) With MMS

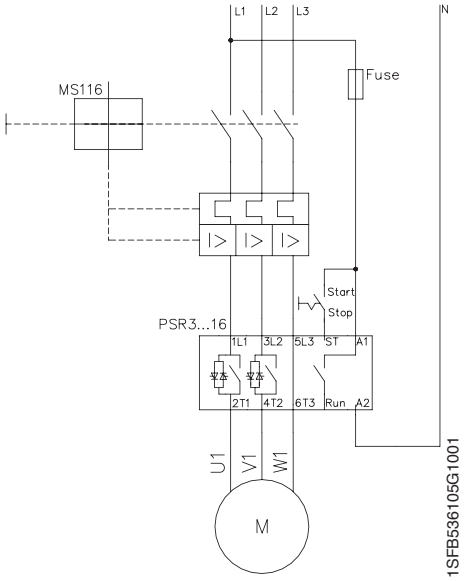

B) With MMS and auxiliary contact

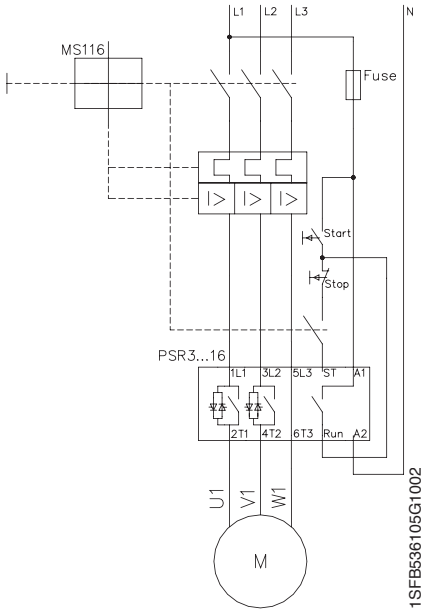

C) With fuses, contactor and O.L.

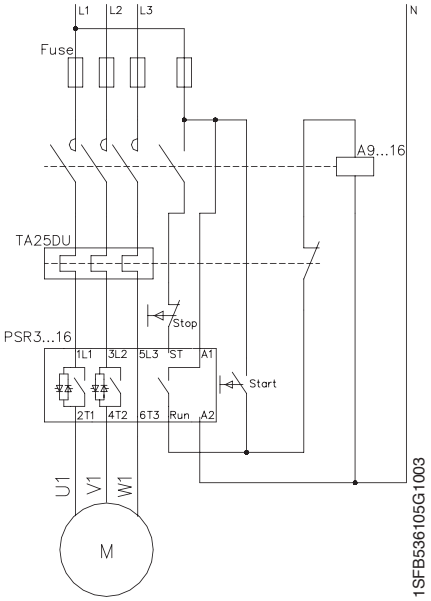

PSR25 ... 45

D) With MMS

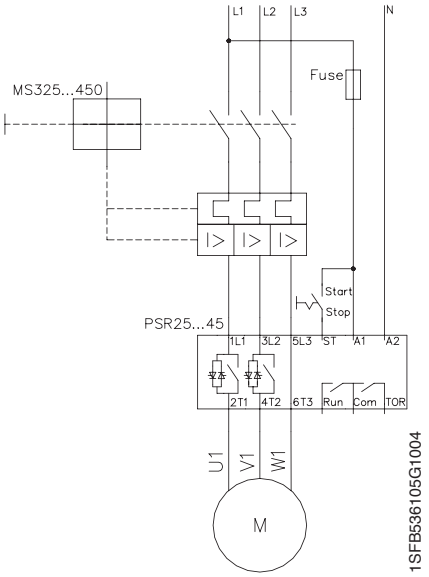

E) With MMS and auxiliary contact

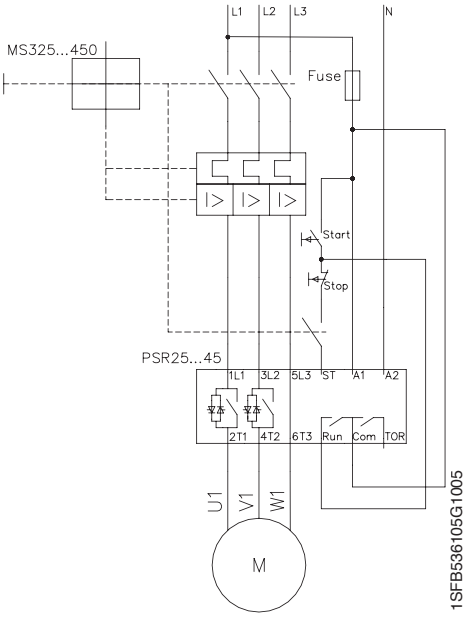

F) With fuses, contactor and O.L.

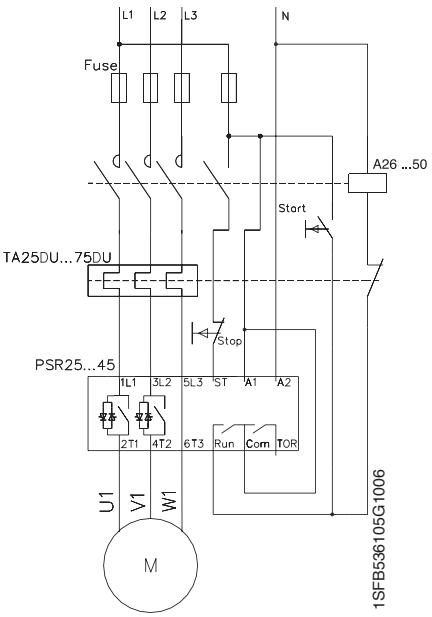

Dimensions

Dimensions in mm. The design, data and dimensions are subject to modification without previous notice.

PSR3 ... 16

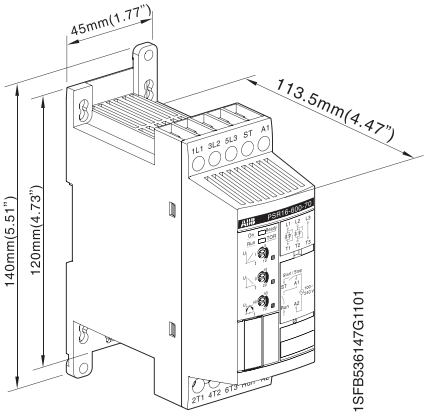

PSR3 ... 16

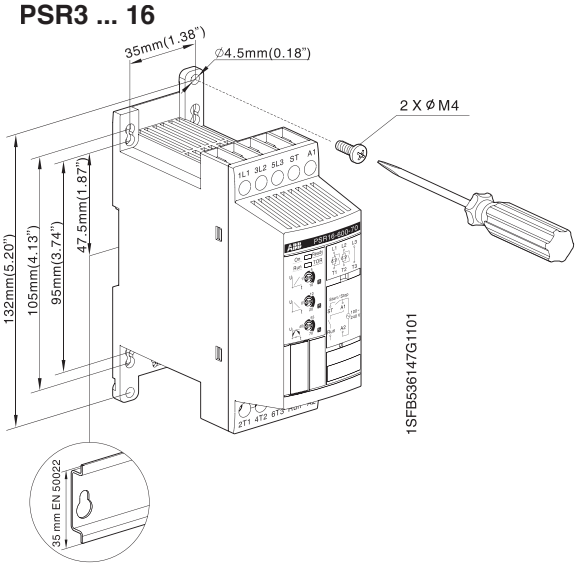

PSR25 ... 30

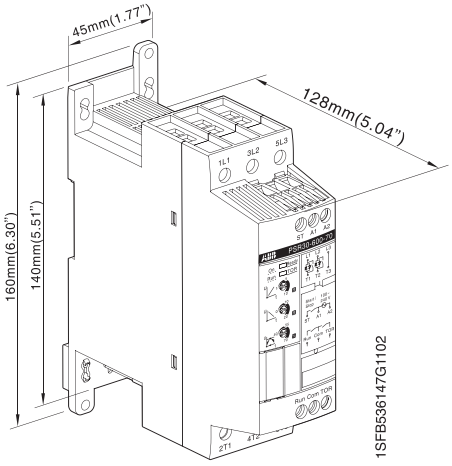

PSR25 ... 30

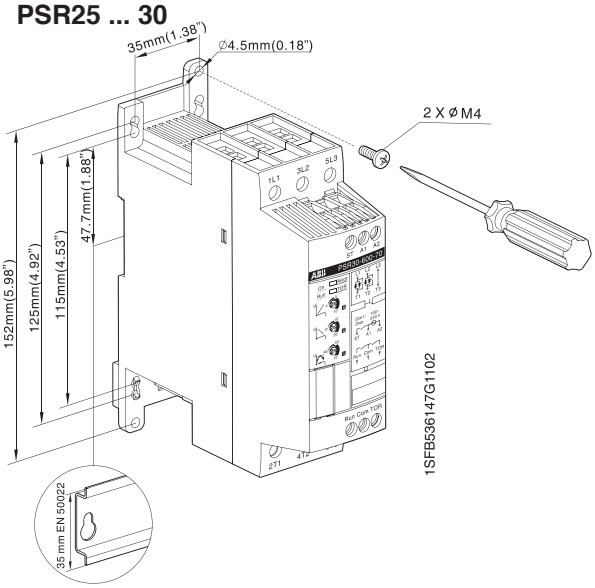

PSR37 ...45

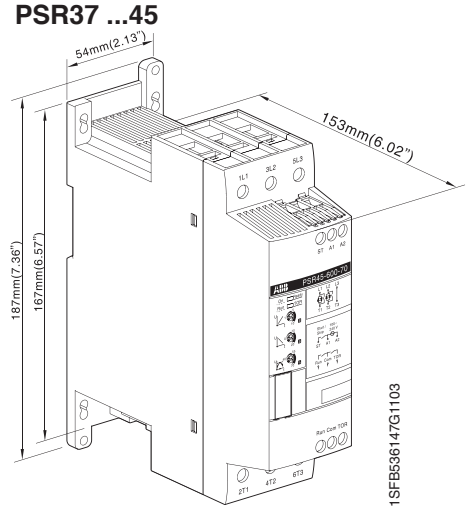

PSR37 ...45

