212814
OGU 005 G3-T3
Fork light barrier

- 4 operating modes as an IO-Link parameter
- Switch-on/off delay as an IO-Link parameter
- Diagnostics with IO-Link
- Metal casing
- Sensitivity is adjustable
- High switching frequency
- Light/dark switching
- Bright ring LED
- High protection type



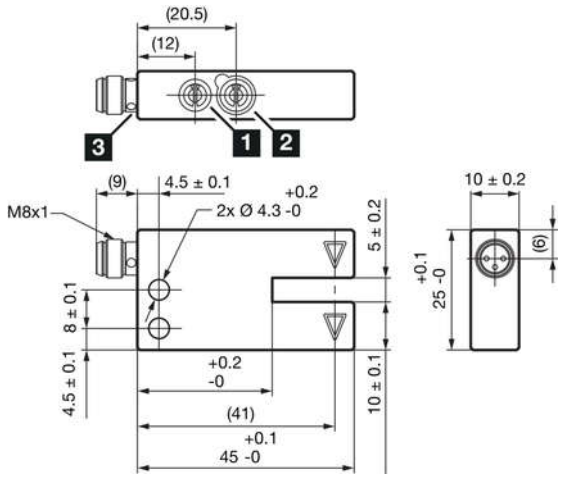

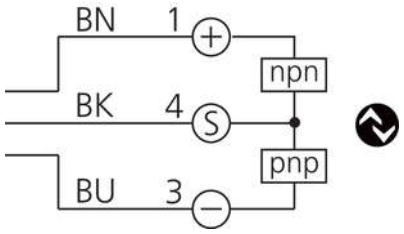

1) Potentiometer
2) NO/ NC
3) LED

BK: black BN: brown BU: blue

Function
IO-Link

Technical data (typ.)	+20°C, 24 V DC
Service voltage	10 … 30 V DC (Supply Class 2)
No-load current (max.)	30 mA
Insulation voltage endurance	500 V
Leg length internal	16.8 mm
Housing dimensions	25 x 45 x 10 mm
Housing length	45 mm
Housing height	25 mm
Housing width	10 mm
Housing material	Aluminum (Black, painted)
Protection class	III, operation on protective low voltage
Approvals	UL
Operating principle	Optical
Evaluation	digital
Design	Fork
Operation modes	STANDARD, HIGH RESOLUTION, POWER, SPEED
Switching output	Push-pull, 100 mA, NO/NC, switchable
Voltage drop (max.)	1.5 V
Interface	IO-Link (V1.1, COM2 (38.4 kBd) Smart Sensor Profile)
Light source	LED
Color	Infrared

212814
OGU 005 G3-T3
Fork light barrier

Technical data (typ.)	+20°C, 24 V DC
Ambient light immunity	25 kLx
Fork opening	5 mm
Resolution (factory setting)	0.2 mm (STANDARD)
Reproducibility (factory setting)	0.02 mm
Resolution (STANDARD)	0.2 mm
Reproducibility (STANDARD)	0.02 mm
Resolution (HIGH RESOLUTION)	0.1 mm
Reproducibility (HIGH RESOLUTION)	0.02 mm
Resolution (POWER)	1 mm
Reproducibility (POWER)	0.02 mm
Resolution (SPEED)	0.2 mm
Reproducibility (SPEED)	0.02 mm
Switching hysteresis (max.)	100 µm
Sensitivity adjustment	Potentiometer or IO-Link
Switching frequency (factory setting)	10000 Hz (STANDARD)
Switching frequency (STANDARD)	10000 Hz
Switching frequency (HIGH RESOLUTION)	10000 Hz
Switching frequency (POWER)	250 Hz
Switching frequency (SPEED)	14000 Hz
Ambient temperature during operation	-25 … +60 °C
Protection type	IP 67
Connection	Connector, M8, 3-pin
Connection cable	TK …

More information / accessories	https://www.di-soric.com/212814

© di-soric . Right to change reserved