TD2913

Temperature transmitter with display

TD-050FFEC02-A-ZVG/US

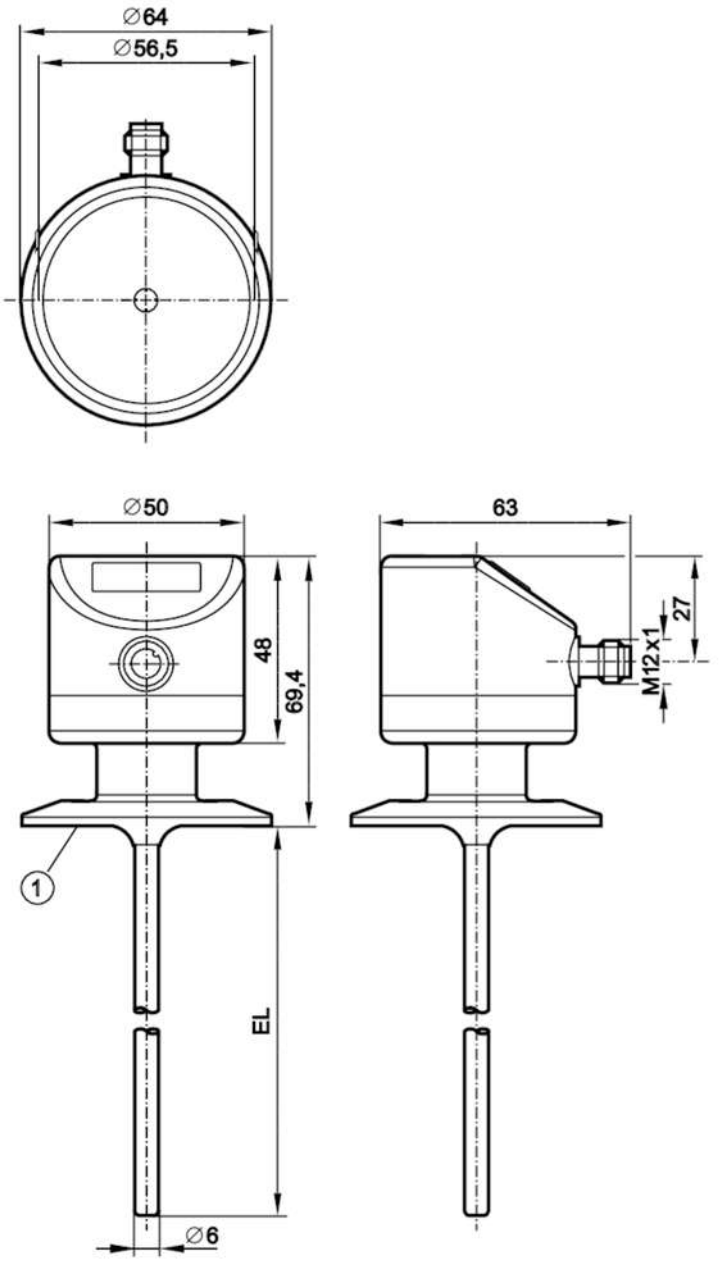

1 2" Clamp ISO 2852
EL = installation length

3A CE cULus LISTED EC 1935/2004 EHEDG Certified FCM FDA IO-Link UKCA

Product characteristics			
Number of inputs and outputs		Number of analogue outputs: 1	
Measuring range		-50...150 °C	-58...302 °F
Communication interface		IO-Link	
Process connection		Clamp DN50 (2") DIN 32676 (ISO 2852)	
Installation length EL	[mm]	50	

Application			
Measuring element		1 x Pt 1000; (to DIN EN 60751, class A)	
Media		liquids and gases	

TD2913

Temperature transmitter with display

TD-050FFEC02-A-ZVG/US

Pressure rating		100 bar	10 MPa
Vacuum resistance		-1000 mbar	-0.1 MPa
Electrical data			
Operating voltage	[V]	18...32 DC; ("supply class 2" to cULus)	
Current consumption	[mA]	< 50	
Protection class		III	
Reverse polarity protection		yes	
Power-on delay time	[s]	2	
Inputs / outputs			
Number of inputs and outputs		Number of analogue outputs: 1	
Outputs			
Total number of outputs		1	
Output signal		analogue signal; IO-Link; (configurable)	
Number of analogue outputs		1	
Analogue current output	[mA]	4...20	
Max. load	[Ω]	300	
Short-circuit protection		yes	
Overload protection		yes	
Measuring/setting range			
Probe length L	[mm]	50	
Measuring range		-50...150 °C	-58...302 °F
Factory setting		0...300 °F	
Resolution			
Resolution of analogue output	[K]	0.04	
Resolution of display	[K]	0.28	
Accuracy / deviations			
Precision analogue output	[K]	± 0,3 + (± 0,1 % MS)	
Temperature coefficient	[% of the span / 10 K]	0,1; (in case of deviation from the reference condition 25 °C)	
Response times			
Dynamic response T05 / T09	[s]	1 / 3	
Interfaces			
Communication interface		IO-Link	
Transmission type		COM2 (38,4 kBaud)	
IO-Link revision		1.1	
Operating conditions			
Ambient temperature	[°C]	-25...80	
Storage temperature	[°C]	-40...100	
Protection		IP 67; IP 68; IP 69K	
Tests / approvals			
EMC		DIN EN 61000-6-2	
		DIN EN 61000-6-3	
Shock resistance		DIN IEC 68-2-27	50 g (11 ms)

TD2913

Temperature transmitter with display

TD-050FFEC02-A-ZVG/US

Vibration resistance		DIN IEC 68-2-6	10 g (10...2000 Hz)
Note on approval		factory certificate available as download at www.factory-certificate.ifm	
UL approval		UL Approval no.	K001

Mechanical data

Weight	[g]	391.5
Housing		cylindrical
Dimensions	[mm]	Ø 64 / L = 119.4
Materials		stainless steel (316L/1.4404); PEI; FKM
Materials (wetted parts)		stainless steel (316L/1.4404) electropolished
Process connection		Clamp DN50 (2") DIN 32676 (ISO 2852)
Surface characteristics Ra/Rz of the wetted parts		Ra: < 0.8
Probe diameter	[mm]	6
Installation length EL	[mm]	50

Displays / operating elements

Display	7-segment LED display, 4-digit
	display unit / status, °C / °F

Remarks

Remarks	MS = set measuring span
	The values for accuracy apply to flowing water.
Pack quantity	1 pcs.

Electrical connection

Connector: 1 x M12; coding: A



Connection

