TECHNICAL DATASHEET

Absolute Encoder AD 58



- For brushless servo motors
- All-digital and highspeed
- +120°C operating temperature
- 10,000 rpm continous operation
- Optical encoder with a true geared multiturn
- BiSS or SSI interface
- Option Sinewave 1 Vpp: Harmonic distortion less than 1%
- Bandwidth 500 kHz

GENERAL INFORMATION

The AD58 is an absolute encoder with a true geared Multiturn and optical sensing technology: The mechanical design consists of two ball bearings and a flexible torque support. The AD58 is ideally suited for integration into BLDC servo motors for demanding applications such as CNC precision machining and printing in professionell quality. Through its low current consumption the AD58 is contributing to lowering cost of ownership.

Fully digital control loop

The new and completely digital OptoAsic technology enables the transition to a truly digital drive system. The conventional absolute encoders still have analog sine wave signals for the feedback of speed and position data. The AD 58, however, provides fully digital position data up to 22 Bit (Singleturn) and 12 Bit (Multiturn) over the BiSS interface with a variable clock rate up to 10 MHz. This corresponds a singleturn resolution of morethan 4 million measured steps.

TECHNICAL DATA
mechanical

Housing diameter	58 mm
Shaft diameter	10 mm (Cone hollow shaft) 10 mm (Cone solid shaft)
Flange (Mounting of housing)	Tether
Protection class shaft input (EN 60529)	IP40
Protection class housing (EN 60529)	IP40
Axial endplay of mounting shaft (hubshaft)	± 0.5 mm
Radial runout of mating shaft (hubshaft)	± 0.1 mm
Max. speed	max. 10 000 rpm (continuous), max. 12 000 rpm (short term)
Starting torque	≤ 1 Ncm
Moment of inertia	ca. 3.8 x 10^{-6} kgm²
Vibration resistance (DIN EN 60068-2-6)	100 m/s² (10 ... 2000 Hz)
Shock resistance (DIN EN 60068-2-27)	1000 m/s² (6 ms)
Operating temperature	-15 °C ... +120 °C
Storage temperature [1]	-15 °C ... +85 °C
Weight	approx. 260 g (ST) / 310 g (MT)

TECHNICAL DATASHEET

Absolute Encoder AD 58

TECHNICAL DATA
mechanical (continued)

Connection	PCB connector, 12 pole

[1] due to packing

TECHNICAL DATA
electrical

Supply voltage	± 10% DC 5 V or DC 10 - 30 V
Max. current w/o load	50 A (ST), 100 A (MT)
Resolution singleturn	13 Bit (SSI) max. 22 Bit (BiSS)
Resolution multiturn	12 Bit
Output code	Binary, Gray
Incremental signals optional	Sinus-Cosinus 1 Vpp
Number of pulses	2048
3dB limiting frequency	500 kHz
Absolute accuracy	±35"
Repeatability	±7"
Parametrization	Resolution, Code type, Direction, Warning, Alarm
Alarm output	Alarm bit (SSI Option), warning and alarm bit (BiSS)

ELECTRICAL CONNECTIONS
PCB connector, 12 pole

Colour	PIN	Signals
violet	1a	$\overline{\text{Data}}$
green	2a	A+
brown/green	3a	0 V Sensor
blue	4a	B+
brown	5a	$\overline{\text{Clock}}$
red//blue	6a	5 V Sensor
green/pink	1b	DC 5 V/ 7 -30 V
white	2b	Clock
red	3b	B-
white/green	4b	0 V (U_N)
yellow	5b	A-
black	6b	Data

CONNECTION ENCODER SIDE

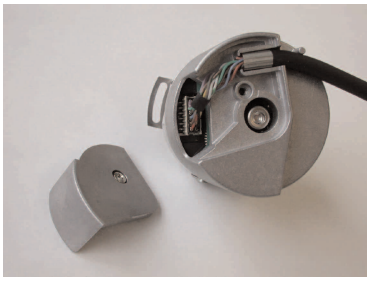

12 pin PCB connector
manufacture Berg, type Minitek
Screen is connected over a
length of 10 mm with
encoder housing.

TECHNICAL DATASHEET

Absolute Encoder AD 58

DIMENSIONED DRAWINGS

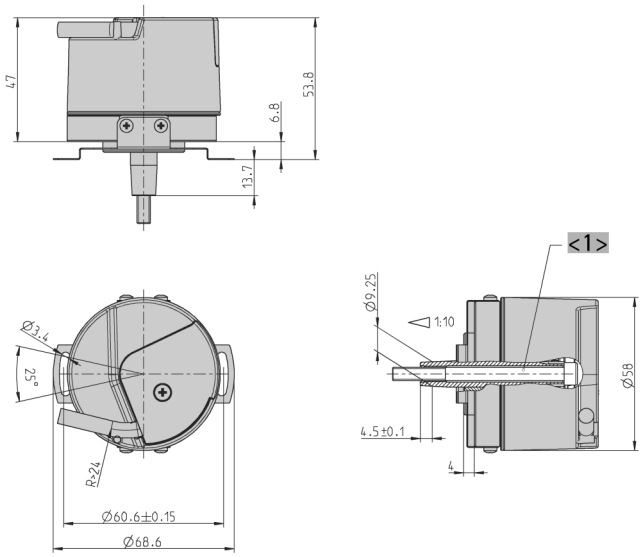

<1> Central mounting screw, Singleturn: DIN 912 M5x50
<1> Central mounting screw, Multiturn: DIN 912 M5x65

Shaft code: "K"
Flange code: "T" (with tether), "O" (without tether)

Dimensions in mm

ORDERING INFORMATION

Type	Resolution	Supply voltage	Flange, Protection, Shaft	Interface	Connection
☐	☐	☐	☐	☐	☐
AD58	**0013** 13 Bit ST **0022** 22 Bit ST (BiSS) **1213** 12 Bit MT + 13 Bit ST **1222** 12 Bit MT + 22 Bit ST (BiSS)	**A** DC 5 V **E** DC 10 - 30 V	**1.0K** Spring tether, IP40, cone 10 mm	**BI** BiSS **SC** SSI Gray (+SinCos 1Vpp)	**0** PCB connector, axial, 12 pole **B** PCB connector, radial, 12 pole, with mating connector and 0.5 m cable

TECHNICAL DATASHEET

Absolute Encoder AD 58
Accessories

DISPLAYS

	Ordering code
Position indicator Signo-SSI	0 727 111