E40205

Mounting adapter for flow sensors

ADAPTER G1-1/4-R1/V4A

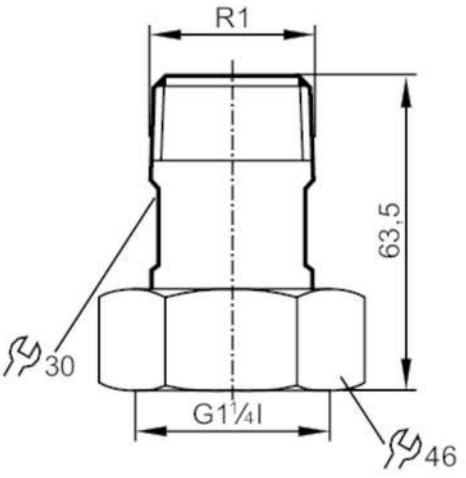

Application		
Design		for flow sensors SU9
Tests / approvals		
Pressure Equipment Directive		A possible classification to PED depends on the application and has to be carried out by the user / operator.
Pressure Equipment Directive EAC		The adapter is intended for use in devices, machines and installations that do not fall under the categories of the technical rule TR CU 032/2013.
Safety instructions		The compatibility between medium and product material has to be checked in all applications.
Mechanical data		
Weight	[g]	517
Materials		stainless steel (1.4404 / 316L)
Sensor connection		G 1 1/4
Process connection		threaded connection R 1
Accessories		
Items supplied		sealings: 2, Centellen
Remarks		
Pack quantity		2 pcs.