DATASHEET - M22-WRK3/K20

Changeover switch, RMQ-Titan, With thumb-grip, maintained, 3 positions, 2 N/O, Bezel: titanium

Part no.	**M22-WRK3/K20**
Catalog No.	**216520**
Alternate Catalog No.	**M22-WRK3-K20Q**
EL-Nummer (Norway)	**4355293**

Delivery program

Product range			RMQ-Titan
Basic function			Selector switch actuators
Mounting hole diameter	∅	mm	22.5
Single unit/Complete unit			Complete unit
Design			With thumb-grip
			maintained
Function:			
			60° # 60°
Connection type			Screw connection
			3 positions
Degree of Protection			IP66
Front ring			Bezel: titanium
Connection to SmartWire-DT			no
Contacts			
N/O = Normally open			2 N/O
Contact sequence			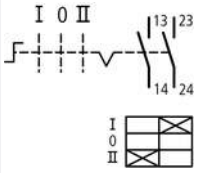
Instructions			Stay-put/spring-return function, can be changed with coding parts M22-XC-Y Contactor states 0, I and II correspond with the position of the actuator as viewed from the front.

Technical data

General

Standards			IEC/EN 60947 VDE 0660
Lifespan, mechanical	Operations	x 10^6	> 0.1
Operating frequency	Operations/h		≦ 2000
Operating torque (screw terminals)		Nm	≦ 0.3
Climatic proofing			Damp heat, constant, to IEC 60068-2-78 Damp heat, cyclic, to IEC 60068-2-30
Degree of Protection			IP66
Ambient temperature			
Open		°C	-25 - +70
Mounting position			As required
Mechanical shock resistance		g	30 Shock duration 11 ms Sinusoidal according to IEC 60068-2-27
shipping classification			DNV GL LR

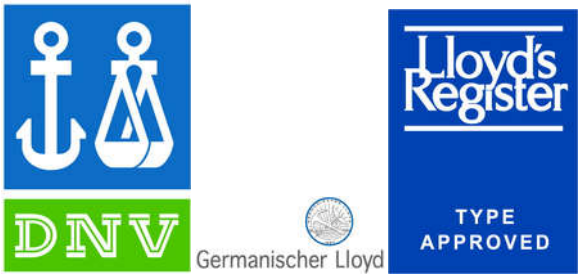

Design verification as per IEC/EN 61439

Technical data for design verification			
Rated operational current for specified heat dissipation	I_n	A	6
Heat dissipation per pole, current-dependent	P_{vid}	W	0.11
Equipment heat dissipation, current-dependent	P_{vid}	W	0
Static heat dissipation, non-current-dependent	P_{vs}	W	0
Heat dissipation capacity	P_{diss}	W	0
Operating ambient temperature min.		°C	-25
Operating ambient temperature max.		°C	70
IEC/EN 61439 design verification			
10.2 Strength of materials and parts			
10.2.2 Corrosion resistance			Meets the product standard's requirements.
10.2.3.1 Verification of thermal stability of enclosures			Meets the product standard's requirements.
10.2.3.2 Verification of resistance of insulating materials to normal heat			Meets the product standard's requirements.
10.2.3.3 Verification of resistance of insulating materials to abnormal heat and fire due to internal electric effects			Meets the product standard's requirements.
10.2.4 Resistance to ultra-violet (UV) radiation			Please enquire
10.2.5 Lifting			Does not apply, since the entire switchgear needs to be evaluated.
10.2.6 Mechanical impact			Does not apply, since the entire switchgear needs to be evaluated.
10.2.7 Inscriptions			Meets the product standard's requirements.
10.3 Degree of protection of ASSEMBLIES			Does not apply, since the entire switchgear needs to be evaluated.
10.4 Clearances and creepage distances			Meets the product standard's requirements.
10.5 Protection against electric shock			Does not apply, since the entire switchgear needs to be evaluated.
10.6 Incorporation of switching devices and components			Does not apply, since the entire switchgear needs to be evaluated.
10.7 Internal electrical circuits and connections			Is the panel builder's responsibility.
10.8 Connections for external conductors			Is the panel builder's responsibility.
10.9 Insulation properties			
10.9.2 Power-frequency electric strength			Is the panel builder's responsibility.
10.9.3 Impulse withstand voltage			Is the panel builder's responsibility.
10.9.4 Testing of enclosures made of insulating material			Is the panel builder's responsibility.
10.10 Temperature rise			The panel builder is responsible for the temperature rise calculation. Eaton will provide heat dissipation data for the devices.
10.11 Short-circuit rating			Is the panel builder's responsibility. The specifications for the switchgear must be observed.
10.12 Electromagnetic compatibility			Is the panel builder's responsibility. The specifications for the switchgear must be observed.
10.13 Mechanical function			The device meets the requirements, provided the information in the instruction leaflet (IL) is observed.

Technical data ETIM 7.0

Low-voltage industrial components (EG000017) / Selector switch, complete (EC001029)	
Electric engineering, automation, process control engineering / Low-voltage switch technology / Command and alarm device / Selector switch, complete unit (ecl@ss10.0.1-27-37-12-43 [ACN984011])	
Number of switch positions	3
Type of control element	Toggle
Suitable for illumination	No
With light source	No
Colour button	Black

Hole diameter		mm	22.5
Width opening		mm	0
Height opening		mm	0
Switching function latching			Yes
Spring-return			No
Degree of protection (IP)			IP66
Degree of protection (NEMA)			4X
Supply voltage		V	0 - 0
Number of contacts as normally open contact			2
Number of contacts as normally closed contact			0
Number of contacts as change-over contact			0
Type of electric connection			Screw connection
With front ring			Yes
Material front ring			Plastic
Colour front ring			Chrome

Approvals

Product Standards			IEC/EN 60947-5; UL 508; CSA-C22.2 No. 14-05; CSA-C22.2 No. 94-91; CE marking
UL File No.			E29184
UL Category Control No.			NKCR
CSA File No.			012528
CSA Class No.			3211-03
North America Certification			UL listed, CSA certified
Degree of Protection			UL/CSA Type 3R, 4X, 12, 13

Dimensions

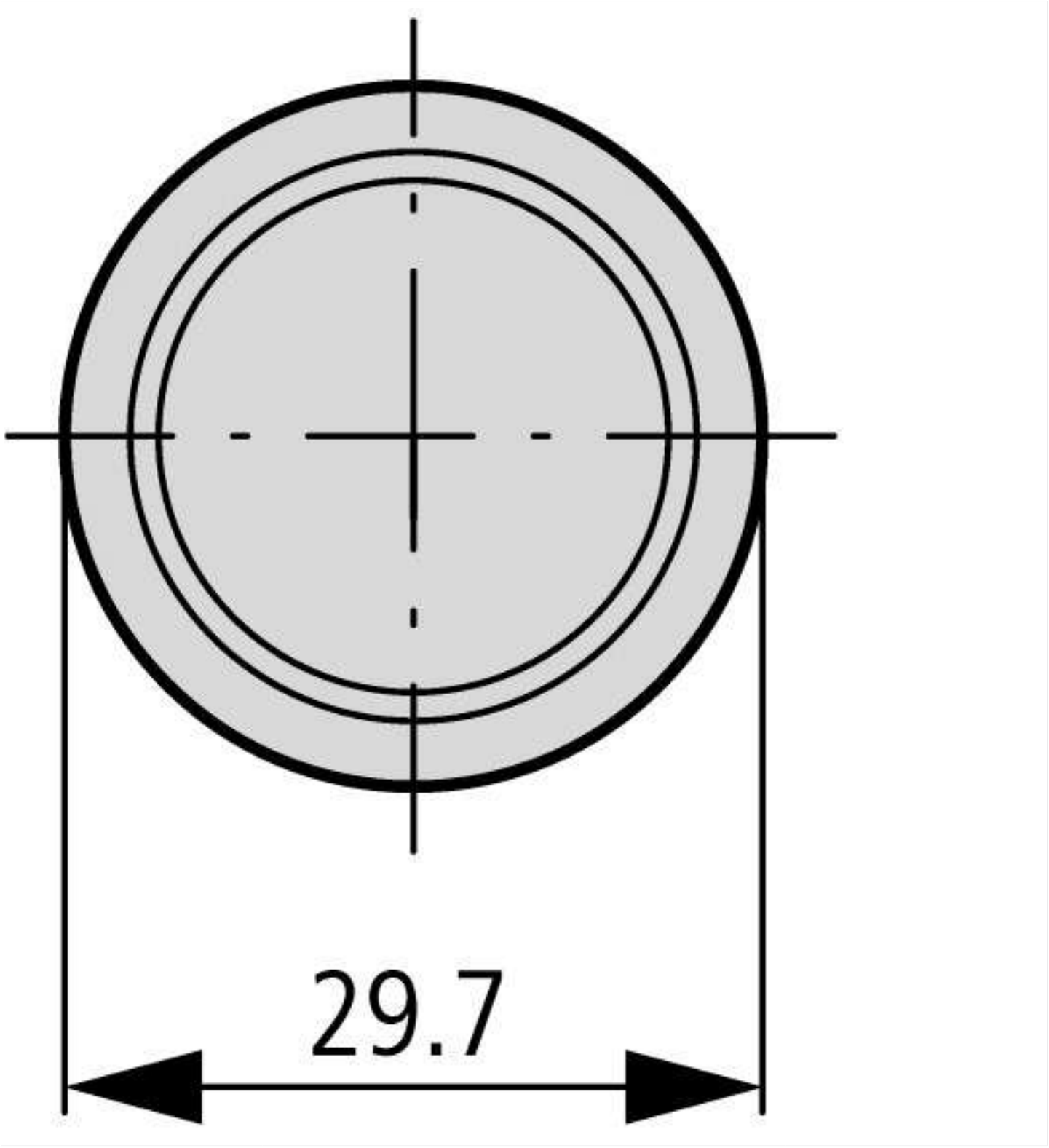

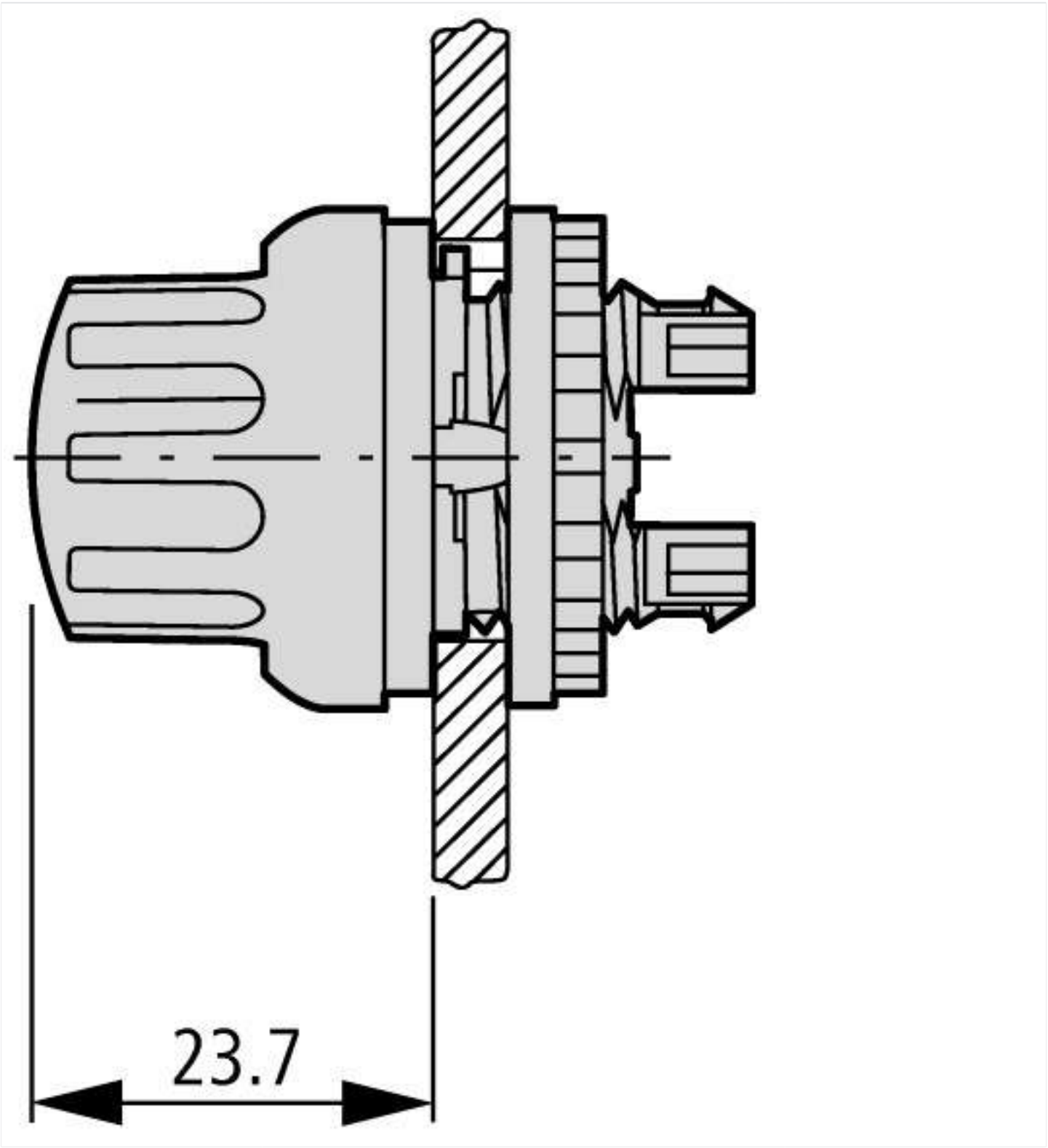

© 07/2021 by Eaton Industries GmbH