E11909

Hexagon nut

NUT M30 CUZN 100PCS.

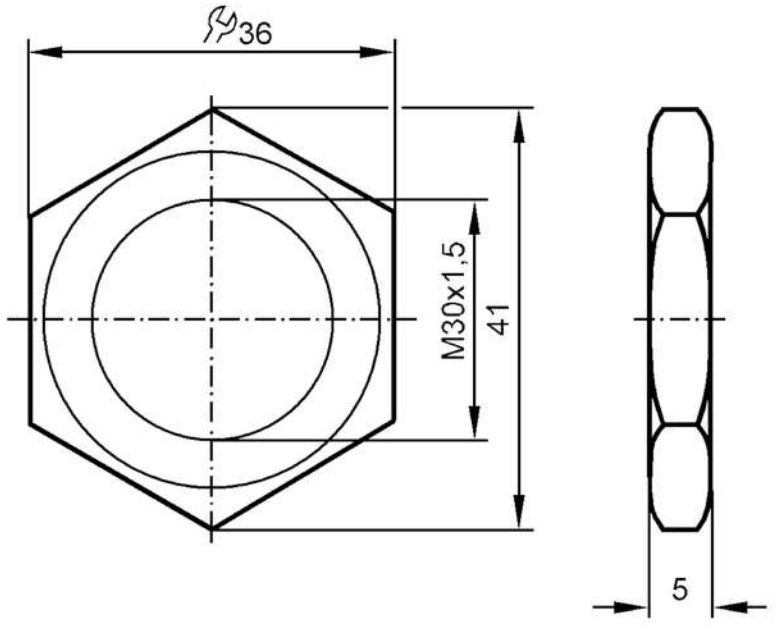

Mechanical data		
Weight	[g]	1720
Dimensions	[mm]	M30 x 1.5
Thread designation		M30 x 1.5
Materials		brass nickel-plated
Remarks		
Pack quantity		100 pcs.