DATASHEET - DILMS25-R23(230V50HZ,240V60HZ)



Safety contactor, 380 V 400 V: 11 kW, 2 N/O, 3 NC, 230 V 50 Hz, 240 V 60 Hz, AC operation, Screw terminals, With mirror contact (not for microswitches).

Part no.	**DILMS25-R23(230V50HZ,240V60HZ)**
Catalog No.	**191758**
Alternate Catalog No.	**XTSE025CE23F**

Delivery program

Product range			Safety contactors
Application			Contactors for Motors
Subrange			Complete devices up to 170 A
Utilization category			AC-1: Non-inductive or slightly inductive loads, resistance furnaces NAC-3: Normal AC induction motors: starting, switch off during running AC-4: Normal AC induction motors: starting, plugging, reversing, inching
Connection technique			Screw terminals
			IE3
Notes			Also suitable for motors with efficiency class IE3. IE3-ready devices are identified by the logo on their packaging.
Description			With two electronically compatible microswitches 1 S + 1 Ö Auxiliary contact element connected non-detachably with basic device (manual activation not possible).
Rated operational current			
AC-3			
380 V 400 V	I_e	A	25
AC-1			
Conventional free air thermal current, 3 pole, 50 - 60 Hz			
Open			
at 40 °C	$I_{th} = I_e$	A	45
enclosed	I_{th}	A	36
Conventional free air thermal current, 1 pole			
open	I_{th}	A	100
enclosed	I_{th}	A	90
Max. rating for three-phase motors, 50 - 60 Hz			
AC-3			
220 V 230 V	P	kW	7.5
380 V 400 V	P	kW	11
660 V 690 V	P	kW	14
AC-4			
220 V 230 V	P	kW	3.5
380 V 400 V	P	kW	6
660 V 690 V	P	kW	8.5
Contacts			
N/O = Normally open			2 N/O
N/C = Normally closed			3 NC
Instructions			Contacts to EN 50 012. With mirror contact (not for microswitches).
Contact sequence			
Actuating voltage			230 V 50 Hz, 240 V 60 Hz
Voltage AC/DC			AC operation

Technical data

General

Standards			IEC/EN 60947, VDE 0660, UL, CSA
Lifespan, mechanical			
AC operated	Operations	x 10^6	10
Operating frequency, mechanical			
AC operated	Operations/h		5000
Climatic proofing			Damp heat, constant, to IEC 60068-2-78 Damp heat, cyclic, to IEC 60068-2-30
Ambient temperature			
Open		°C	-25 - +60
Enclosed		°C	- 25 - 40
Storage		°C	- 40 - 80
Mounting position			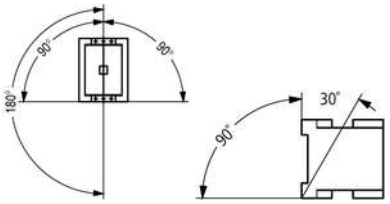
Mechanical shock resistance (IEC/EN 60068-2-27)			
Half-sinusoidal shock, 10 ms			
Main contacts			
N/O contact		g	10
Auxiliary contacts			
N/O contact		g	7
N/C contact		g	5
Mechanical shock resistance (IEC/EN 60068-2-27) when tabletop-mounted			
Half-sinusoidal shock, 10 ms			
Main contacts			
N/O contact		g	6.9
Auxiliary contacts			
N/O contact		g	5.3
N/C contact		g	3.5
Degree of Protection			IP00
Protection against direct contact when actuated from front (EN 50274)			Finger and back-of-hand proof
Altitude		m	Max. 2000
Weight			
AC operated		kg	0.503
Screw connector terminals			
Terminal capacity main cable			
Solid		mm^2	1 x (0.75 - 16) 2 x (0.75 - 10)
Flexible with ferrule		mm^2	1 x (0.75 - 16) 2 x (0.75 - 10)
Stranded		mm^2	1 x 16
Solid or stranded		AWG	single 18 - 6, double 18 - 8
Stripping length		mm	10
Terminal screw			M5
Tightening torque		Nm	3.2
Tool			
Pozidriv screwdriver		Size	2
Standard screwdriver		mm	0.8 x 5.5 1 x 6
Terminal capacity control circuit cables			
Solid		mm^2	1 x (0.75 - 2.5) 2 x (0.75 - 2.5)
Flexible with ferrule		mm^2	1 x (0.75 - 2.5) 2 x (0.75 - 2.5)

Solid or stranded		AWG	18 - 14
Stripping length		mm	10
Terminal screw			M3.5
Tightening torque		Nm	1.2
Tool			
Pozidriv screwdriver		Size	2
Standard screwdriver		mm	0.8 x 5.5 1 x 6

Main conducting paths

Rated impulse withstand voltage	U_{imp}	V AC	8000
Overvoltage category/pollution degree			III/3
Rated insulation voltage	U_i	V AC	690
Rated operational voltage	U_e	V AC	690
Safe isolation to EN 61140			
between coil and contacts		V AC	440
between the contacts		V AC	440
Making capacity (p.f. to IEC/EN 60947)			
	Up to 690 V	A	350
Breaking capacity			
220 V 230 V		A	250
380 V 400 V		A	250
500 V		A	250
660 V 690 V		A	150
Short-circuit rating			
Short-circuit protection maximum fuse			
Type “2” coordination			
400 V	gG/gL 500 V	A	35
690 V	gG/gL 690 V	A	35
Type “1” coordination			
400 V	gG/gL 500 V	A	100
690 V	gG/gL 690 V	A	50

AC

AC-1			
Rated operational current			
Conventional free air thermal current, 3 pole, 50 - 60 Hz			
Open			
at 40 °C	$I_{th} = I_e$	A	45
at 50 °C	$I_{th} = I_e$	A	43
at 55 °C	$I_{th} = I_e$	A	42
at 60 °C	$I_{th} = I_e$	A	40
enclosed	I_{th}	A	36
Conventional free air thermal current, 1 pole			
open	I_{th}	A	100
enclosed	I_{th}	A	90
AC-3			
Rated operational current			
Open, 3-pole: 50 – 60 Hz			
Notes			At maximum permissible ambient temperature (open.)
220 V 230 V	I_e	A	25
240 V	I_e	A	25
380 V 400 V	I_e	A	25
415 V	I_e	A	25
440V	I_e	A	25
500 V	I_e	A	25
660 V 690 V	I_e	A	15

380 V 400 V	I_e	A	25
Motor rating	P	kWh	
220 V 230 V	P	kW	7.5
240V	P	kW	8.5
380 V 400 V	P	kW	11
415 V	P	kW	14.5
440 V	P	kW	15.5
500 V	P	kW	17.5
660 V 690 V	P	kW	14
AC-4			
Open, 3-pole: 50 – 60 Hz			
220 V 230 V	I_e	A	13
240 V	I_e	A	13
380 V 400 V	I_e	A	13
415 V	I_e	A	13
440 V	I_e	A	13
500 V	I_e	A	13
660 V 690 V	I_e	A	10
Motor rating	P	kWh	
220 V 230 V	P	kW	3.5
240 V	P	kW	4
380 V 400 V	P	kW	6
415 V	P	kW	6.5
440 V	P	kW	7
500 V	P	kW	8
660 V 690 V	P	kW	8.5

DC

Rated operational current, open			
DC-1			
60 V	I_e	A	40
110 V	I_e	A	40
220 V	I_e	A	40

Current heat loss

3 pole, at I_{th} (60°)		W	10.8
Current heat loss at I_e to AC-3/400 V		W	4.2
Impedance per pole		mΩ	2.7

Magnet systems

Voltage tolerance			
AC operated	Pick-up	x U_c	0.8 - 1.1
Drop-out voltage AC operated	Drop-out	x U_c	0.3 - 0.6
Power consumption of the coil in a cold state and 1.0 x U_S			
50 Hz	Pick-up	VA	52
50 Hz	Sealing	VA	7.1
50 Hz	Sealing	W	2.1
60 Hz	Pick-up	VA	67
60 Hz	Sealing	VA	8.7
60 Hz	Sealing	W	2.1
Duty factor		% DF	100
Changeover time at 100 % U_S (recommended value)			
Main contacts			
AC operated			
Closing delay		ms	16 - 22
Opening delay		ms	8 - 14
Arcing time		ms	10

Electromagnetic compatibility (EMC)

Emitted interference		according to EN 60947-1
Interference immunity		according to EN 60947-1

Rating data for approved types

Switching capacity		
Maximum motor rating		
Three-phase		
200 V 208 V	HP	7.5
230 V 240 V	HP	10
460 V 480 V	HP	15
575 V 600 V	HP	20
Single-phase		
115 V 120 V	HP	2
230 V 240 V	HP	5
General use	A	40
Auxiliary contacts		
Pilot Duty		
AC operated		A600
DC operated		P300
General Use		
AC	V	600
AC	A	10
DC	V	250
DC	A	1
Short Circuit Current Rating	SCCR	
Basic Rating		
SCCR	kA	5
max. Fuse	A	125
max. CB	A	125
480 V High Fault		
SCCR (fuse)	kA	10/100
max. Fuse	A	125/70 Class J
SCCR (CB)	kA	10/65
max. CB	A	50/32
600 V High Fault		
SCCR (fuse)	kA	10/100
max. Fuse	A	125/100 Class J
SCCR (CB)	kA	10/22
max. CB	A	50/32
Special Purpose Ratings		
Electrical Discharge Lamps (Ballast)		
480V 60Hz 3phase, 277V 60Hz 1phase	A	40
600V 60Hz 3phase, 347V 60Hz 1phase	A	40
Incandescent Lamps (Tungsten)		
480V 60Hz 3phase, 277V 60Hz 1phase	A	40
600V 60Hz 3phase, 347V 60Hz 1phase	A	40
Resistance Air Heating		
480V 60Hz 3phase, 277V 60Hz 1phase	A	40
600V 60Hz 3phase, 347V 60Hz 1phase	A	40
Refrigeration Control (CSA only)		
LRA 480V 60Hz 3phase	A	240
FLA 480V 60Hz 3phase	A	40

LRA 600V 60Hz 3phase		A	180
FLA 600V 60Hz 3phase		A	30
Definite Purpose Ratings (100,000 cycles acc. to UL 1995)			
LRA 480V 60Hz 3phase		A	150
FLA 480V 60Hz 3phase		A	25
Elevator Control			
200V 60Hz 3phase		HP	3
200V 60Hz 3phase		A	11
240V 60Hz 3phase		HP	5
240V 60Hz 3phase		A	15.2
480V 60Hz 3phase		HP	10
480V 60Hz 3phase		A	14
600V 60Hz 3phase		HP	15
600V 60Hz 3phase		A	17

Design verification as per IEC/EN 61439

Technical data for design verification			
Rated operational current for specified heat dissipation	I_n	A	25
Heat dissipation per pole, current-dependent	P_{vid}	W	1.4
Equipment heat dissipation, current-dependent	P_{vid}	W	4.2
Static heat dissipation, non-current-dependent	P_{vs}	W	2.1
Heat dissipation capacity	P_{diss}	W	0
Operating ambient temperature min.		°C	-25
Operating ambient temperature max.		°C	60
IEC/EN 61439 design verification			
10.2 Strength of materials and parts			
10.2.2 Corrosion resistance			Meets the product standard's requirements.
10.2.3.1 Verification of thermal stability of enclosures			Meets the product standard's requirements.
10.2.3.2 Verification of resistance of insulating materials to normal heat			Meets the product standard's requirements.
10.2.3.3 Verification of resistance of insulating materials to abnormal heat and fire due to internal electric effects			Meets the product standard's requirements.
10.2.4 Resistance to ultra-violet (UV) radiation			Meets the product standard's requirements.
10.2.5 Lifting			Does not apply, since the entire switchgear needs to be evaluated.
10.2.6 Mechanical impact			Does not apply, since the entire switchgear needs to be evaluated.
10.2.7 Inscriptions			Meets the product standard's requirements.
10.3 Degree of protection of ASSEMBLIES			Does not apply, since the entire switchgear needs to be evaluated.
10.4 Clearances and creepage distances			Meets the product standard's requirements.
10.5 Protection against electric shock			Does not apply, since the entire switchgear needs to be evaluated.
10.6 Incorporation of switching devices and components			Does not apply, since the entire switchgear needs to be evaluated.
10.7 Internal electrical circuits and connections			Is the panel builder's responsibility.
10.8 Connections for external conductors			Is the panel builder's responsibility.
10.9 Insulation properties			
10.9.2 Power-frequency electric strength			Is the panel builder's responsibility.
10.9.3 Impulse withstand voltage			Is the panel builder's responsibility.
10.9.4 Testing of enclosures made of insulating material			Is the panel builder's responsibility.
10.10 Temperature rise			The panel builder is responsible for the temperature rise calculation. Eaton will provide heat dissipation data for the devices.
10.11 Short-circuit rating			Is the panel builder's responsibility. The specifications for the switchgear must be observed.
10.12 Electromagnetic compatibility			Is the panel builder's responsibility. The specifications for the switchgear must be observed.
10.13 Mechanical function			The device meets the requirements, provided the information in the instruction leaflet (IL) is observed.

Technical data ETIM 7.0

Low-voltage industrial components (EG000017) / Power contactor, AC switching (EC000066)
Electric engineering, automation, process control engineering / Low-voltage switch technology / Contactor (LV) / Power contactor, AC switching (ecl@ss10.0.1-27-37-10-03 [AAB718015])

Rated control supply voltage Us at AC 50HZ	V	230 - 230
Rated control supply voltage Us at AC 60HZ	V	240 - 240
Rated control supply voltage Us at DC	V	0 - 0
Voltage type for actuating		AC
Rated operation current Ie at AC-1, 400 V	A	45
Rated operation current Ie at AC-3, 400 V	A	25
Rated operation power at AC-3, 400 V	kW	11
Rated operation current Ie at AC-4, 400 V	A	13
Rated operation power at AC-4, 400 V	kW	6
Rated operation power NEMA	kW	11
Modular version		No
Number of auxiliary contacts as normally open contact		2
Number of auxiliary contacts as normally closed contact		3
Type of electrical connection of main circuit		Screw connection
Number of normally closed contacts as main contact		0
Number of main contacts as normally open contact		3

Approvals

Product Standards		IEC/EN 60947-4-1; UL 60947-4-1; CSA - C22.2 No. 60947-4-1-14; CE marking
UL File No.		E29096
UL Category Control No.		NLDX
CSA File No.		012528
CSA Class No.		2411-03, 3211-04
North America Certification		UL listed, CSA certified
Specially designed for North America		No

Characteristics

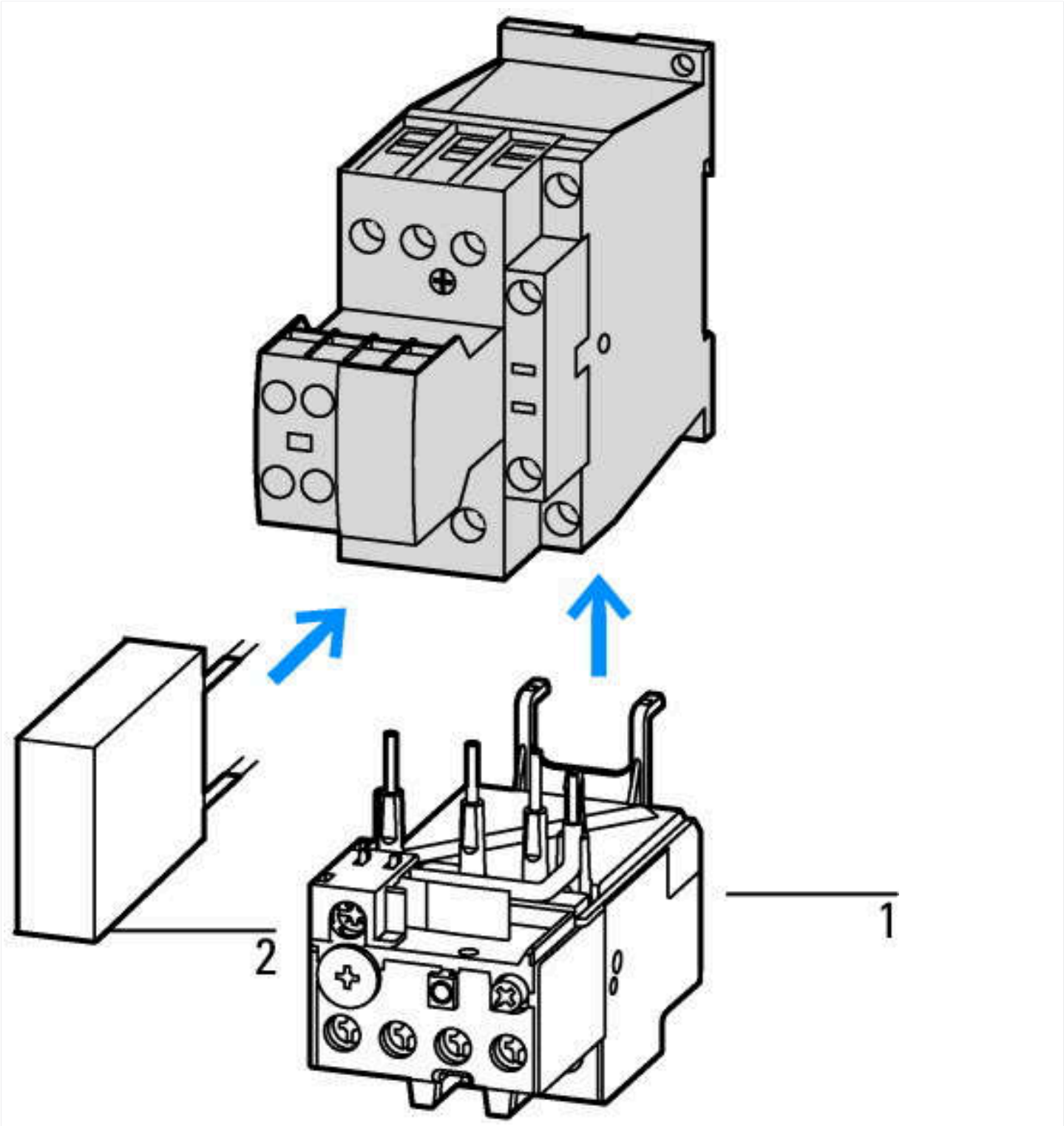

1: Overload relay
2: Suppressor

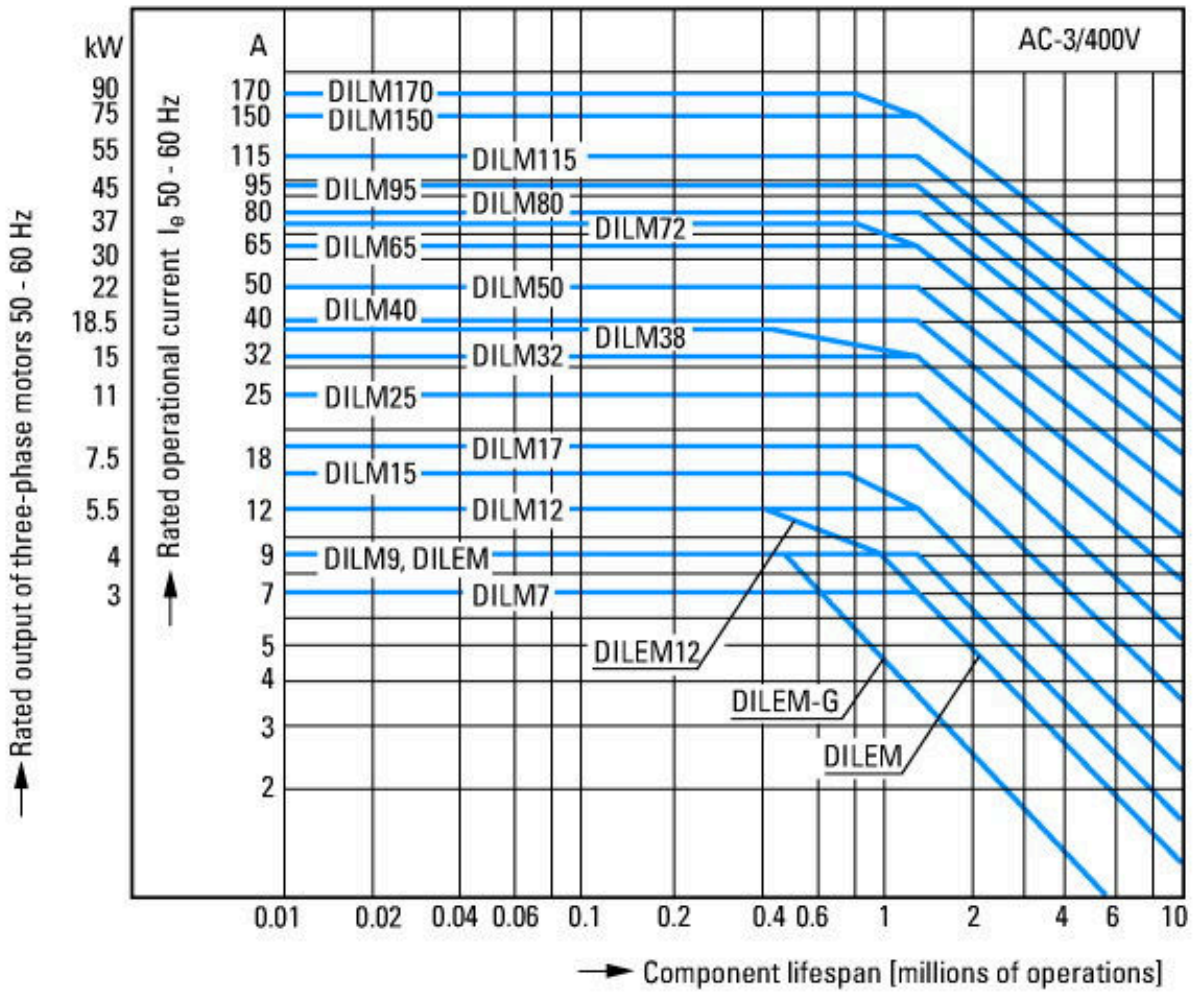

Normal AC induction motor
Operating characteristics
Switch on: from stop
Switch off: during run
Electrical characteristics:
Switch on: up to 6 x Rated motor current
Switch off: up to 1 x Rated motor current
Utility category

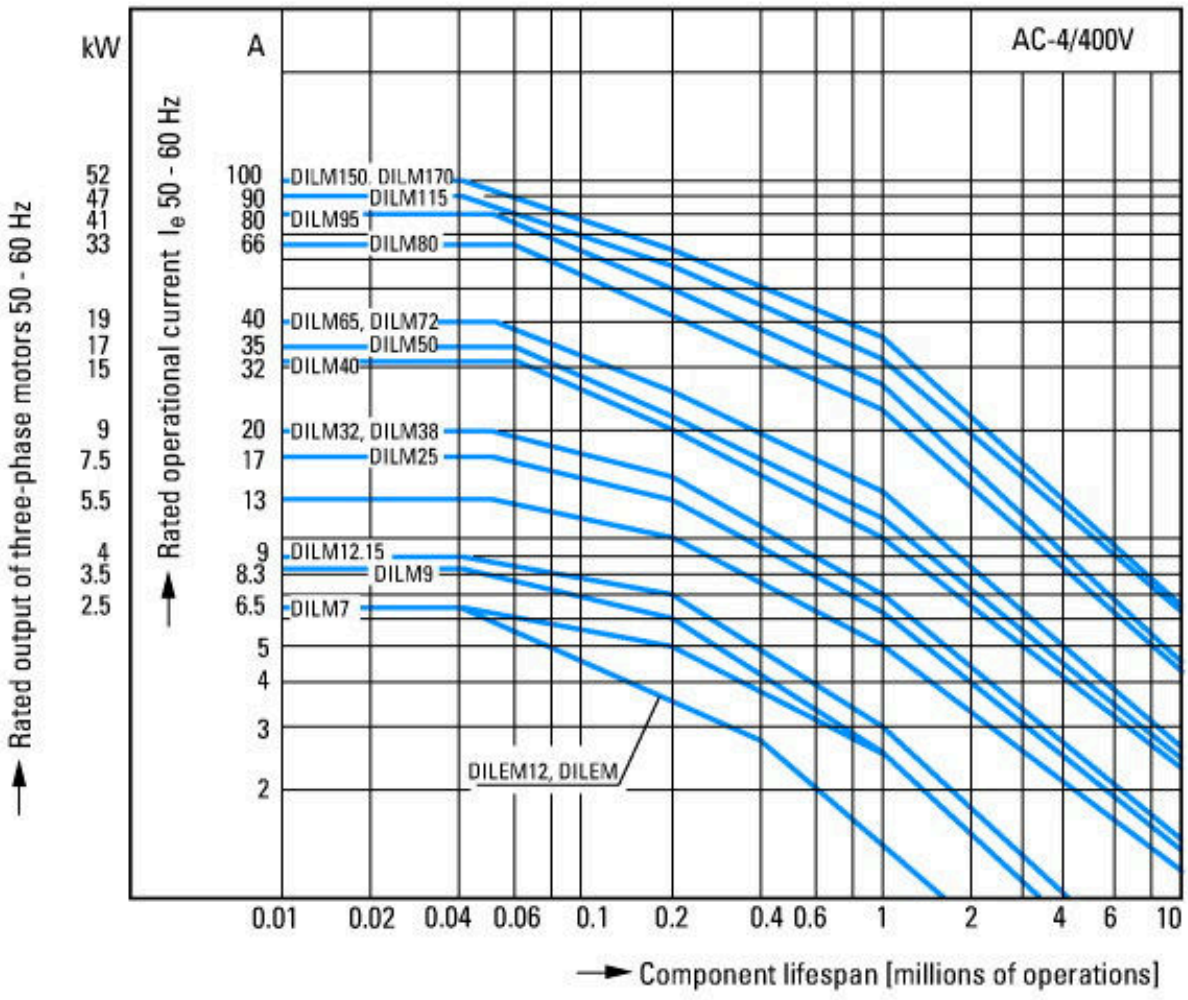

Extreme switching duty
Normal AC induction motor
Operating characteristics
Inching, plugging, reversing
Electrical characteristics:
Switch on: up to 6 x Rated motor current
Switch off:up to 6 x Rated motor current
Utilization

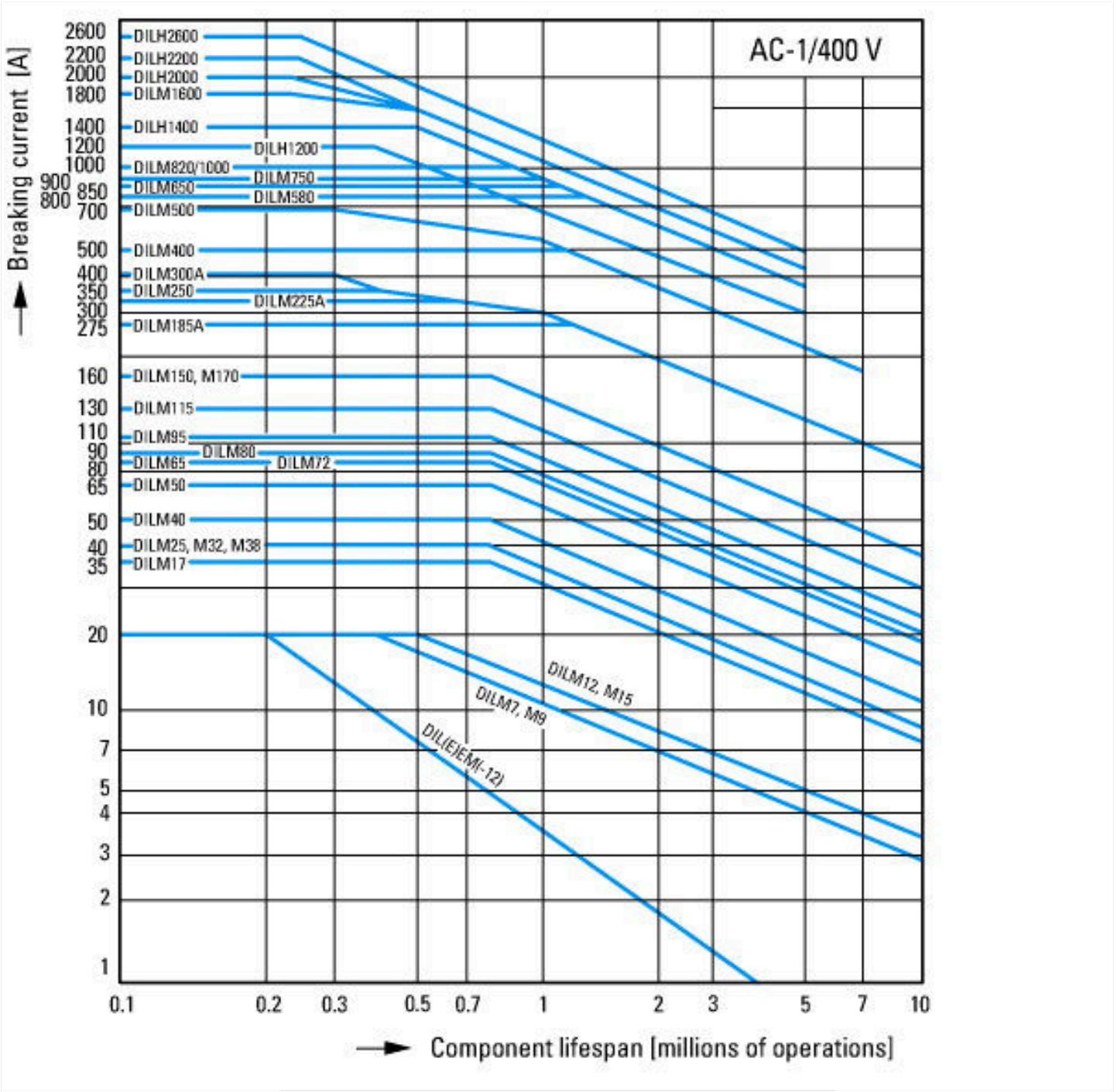

Switching conditions for non-motor consumers, 3 pole, 4 pole
Operating characteristics
Non inductive and slightly inductive loads
Electrical characteristics:
Switch on: 1 x rated operational current
Switch off: 1 x rated operational current
Utilization

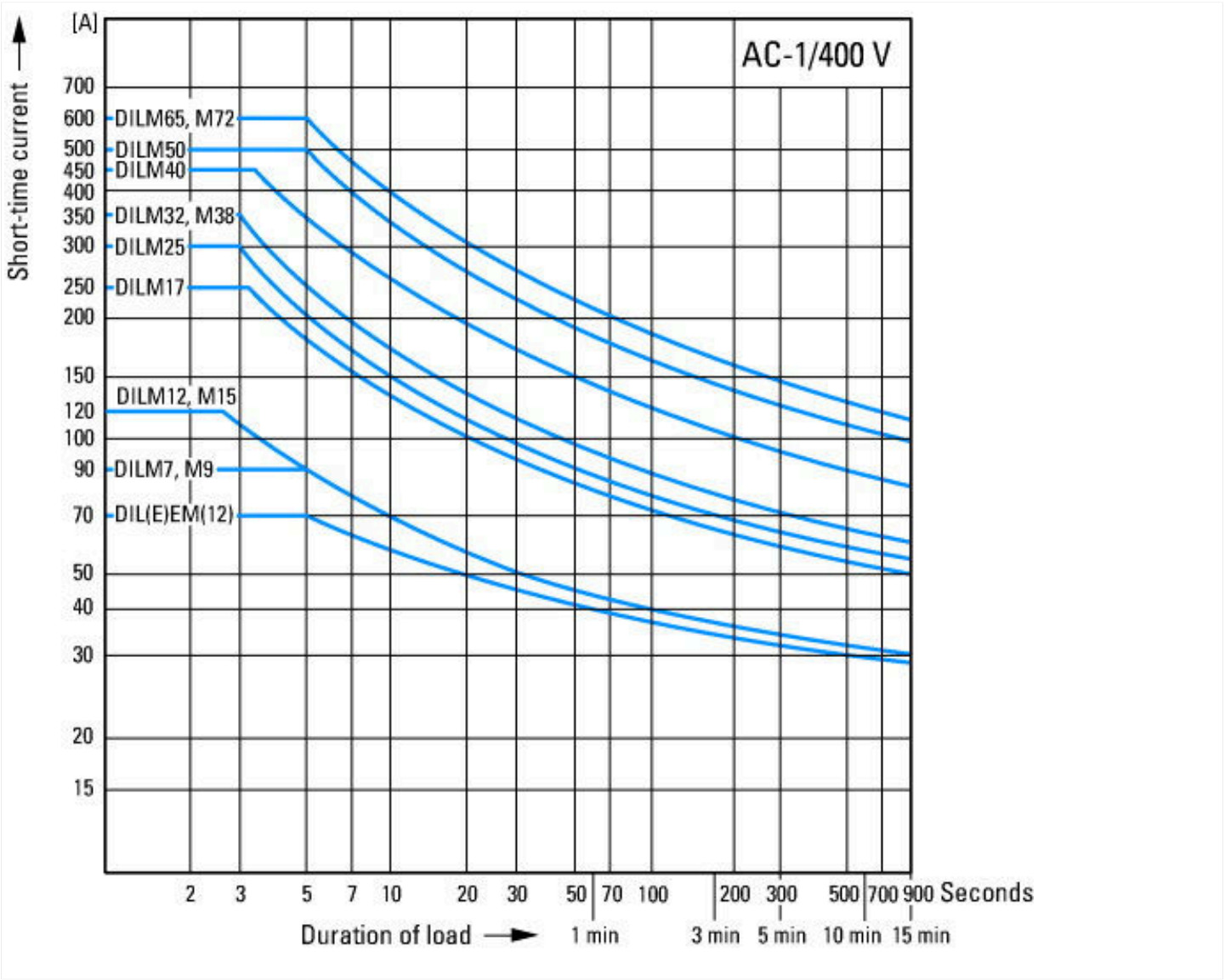

Dimensions

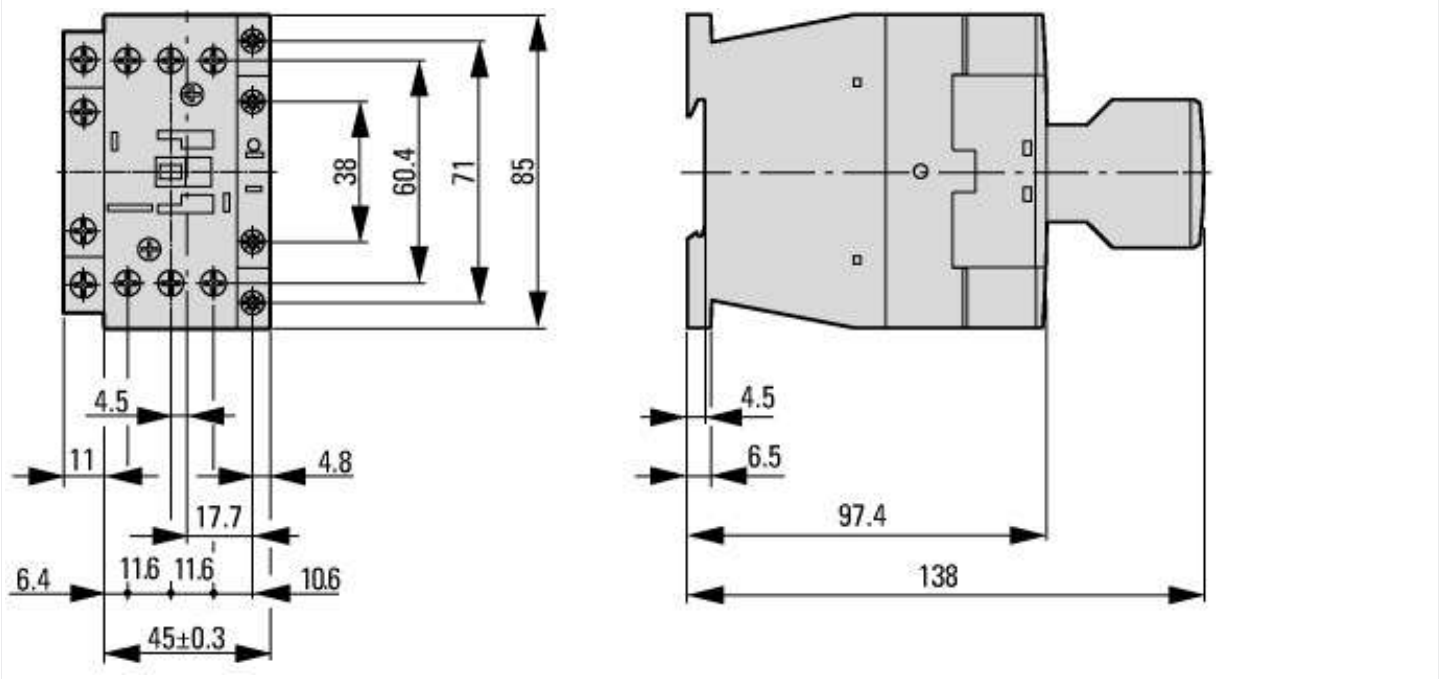

Contactor with auxiliary contact module

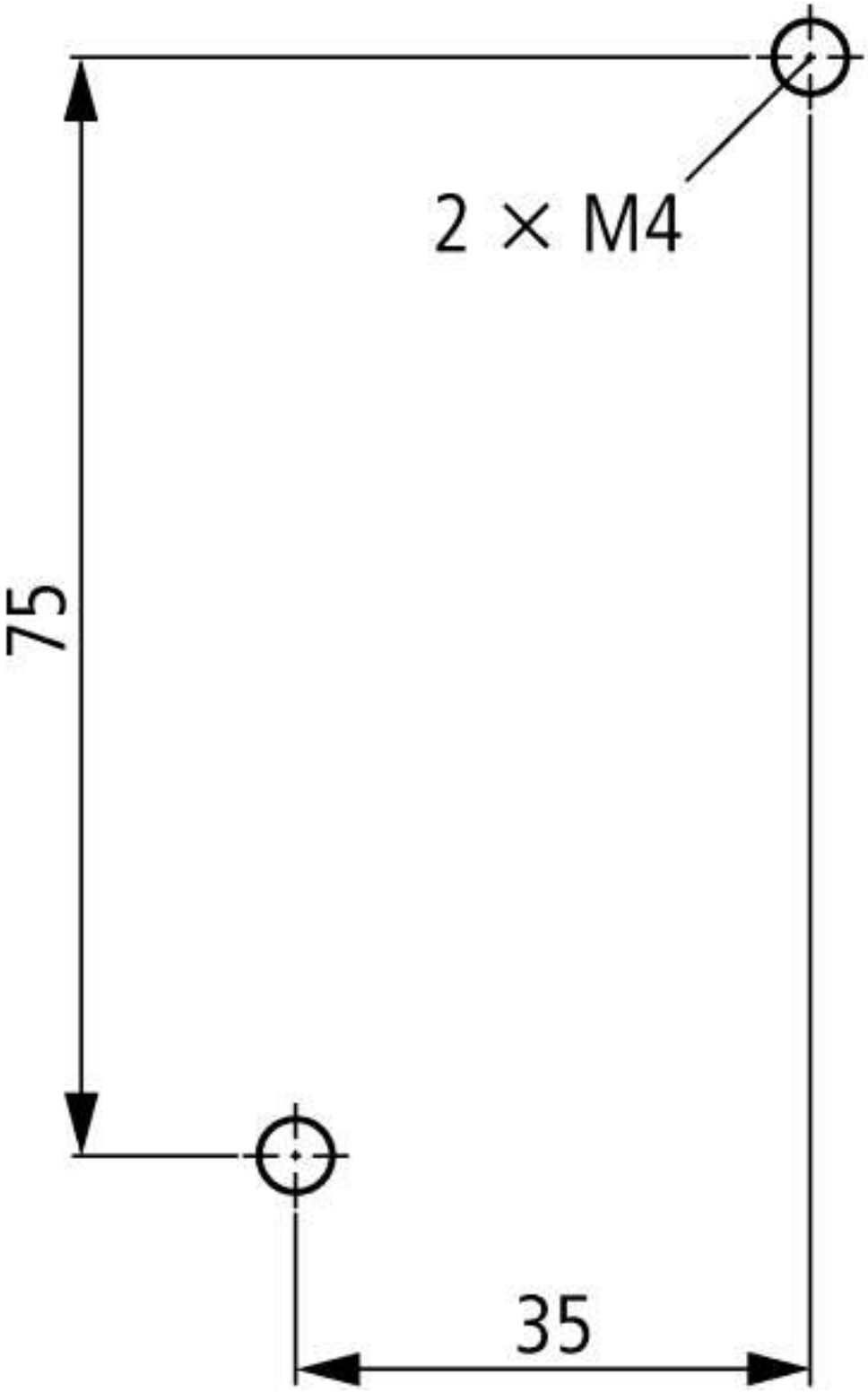

side clearance to earthed parts: 6 mm

© 12/2020 by Eaton Industries GmbH