Technical data sheet
Optical distance sensor
Part no.: 50137818
ODS9L2.8/LAK-450-M12



For Illustration purposes only

Contents

- Technical data
- Dimensioned drawings
- Electrical connection
- Diagrams
- Operation and display
- Part number code
- Notes
- Accessories

Technical data

Basic data

Series	9
Application	Fill-level monitoring
	Length measurement in material cutting
	Object measurement
Type of scanning system	Against object

Special version

Special version	Activation input
	Deactivation input
	Teach input

Optical data

Beam path	Collimated
Light source	Laser, Red
Wavelength	650 nm
Laser class	2, IEC/EN 60825-1:2014
Transmitted-signal shape	Pulsed
Pulse duration	22,000 µs
Light spot size [at sensor distance]	1 mm [450 mm]
Type of light spot geometry	Round

Measurement data

Measurement range	50 ... 450 mm
Resolution	0.1 mm
Accuracy	1 %
Reference value, accuracy	Measurement distance
Reproducibility (1 sigma)	0.1 mm
Temperature drift	0.02 %/K
Referencing	No
Optical distance measurement principle	Triangulation

Electrical data

Protective circuit	Polarity reversal protection
	Short circuit protected
	Transient protection

Performance data

Supply voltage U_B	18 ... 30 V, DC
Residual ripple	0 ... 15 %, From U_B
Open-circuit current	0 ... 50 mA

Inputs

Number of digital switching inputs	1 Piece(s)

Switching inputs

Voltage type	DC
Switching voltage	U_B

Digital switching input 1

Function	Activation input
	Deactivation input
	Teach input
	Trigger

Outputs

Number of analog outputs	1 Piece(s)
Number of digital switching outputs	1 Piece(s)

Analog output 1

Type	Configurable, factory setting: current
Assignment	Connection 1, pin 2

Switching outputs

Voltage type	DC
Switching voltage	high: ≥(U_B-2V)
	low: ≤ 2 V

Switching output 1

Assignment	Connection 1, pin 4
Switching element	Transistor, Push-pull
Switching principle	IO-Link / light switching (PNP)/dark switching (NPN)

Time behavior

Response time	1 ms, Under constant ambient conditions, 90% diffuse reflection, standard measure mode
Readiness delay	300 ms

Interface

Type	IO-Link

IO-Link

COM mode	COM3
Profile	Smart sensor profile
Min. cycle time	COM3 = 0.5 ms
Frame type	2.V
Port type	A
Specification	V1.1
SIO-mode support	Yes
Process data IN	4 byte
Process data OUT	8 bit
Dual Channel	Yes

Connection

Number of connections	1 Piece(s)

Connection 1

Function	Signal IN
	Signal OUT
	Voltage supply
Type of connection	Connector, Turning, 90°
Thread size	M12
Type	Male
Material	Plastic
No. of pins	5 -pin
Encoding	A-coded

Mechanical data

Design	Cubic
Dimension (W x H x L)	21 mm x 50 mm x 50 mm
Housing material	Plastic
Lens cover material	Glass
Net weight	50 g
Housing color	Red
Type of fastening	Through-hole mounting
	Via optional mounting device

Technical data

Operation and display

Type of display	LED
	OLED display
Number of LEDs	2 Piece(s)
Operational controls	Control buttons
	PC software

Environmental data

Ambient temperature, operation	-20 ... 50 °C
Ambient temperature, storage	-30 ... 70 °C
Ambient light sensitivity	20,000 lx, EN 60947-5-2

Certifications

Degree of protection	IP 67
Protection class	III
Approvals	UL

Classification

Customs tariff number	90318020
ECLASS 5.1.4	27270801
ECLASS 8.0	27270801
ECLASS 9.0	27270801
ECLASS 10.0	27270801
ECLASS 11.0	27270801
ECLASS 12.0	27270916
ECLASS 13.0	27270916
ECLASS 14.0	27270916
ECLASS 15.0	27270916
ETIM 5.0	EC001825
ETIM 6.0	EC001825
ETIM 7.0	EC001825
ETIM 8.0	EC001825
ETIM 9.0	EC001825
ETIM 10.0	EC001825

Dimensioned drawings

All dimensions in millimeters

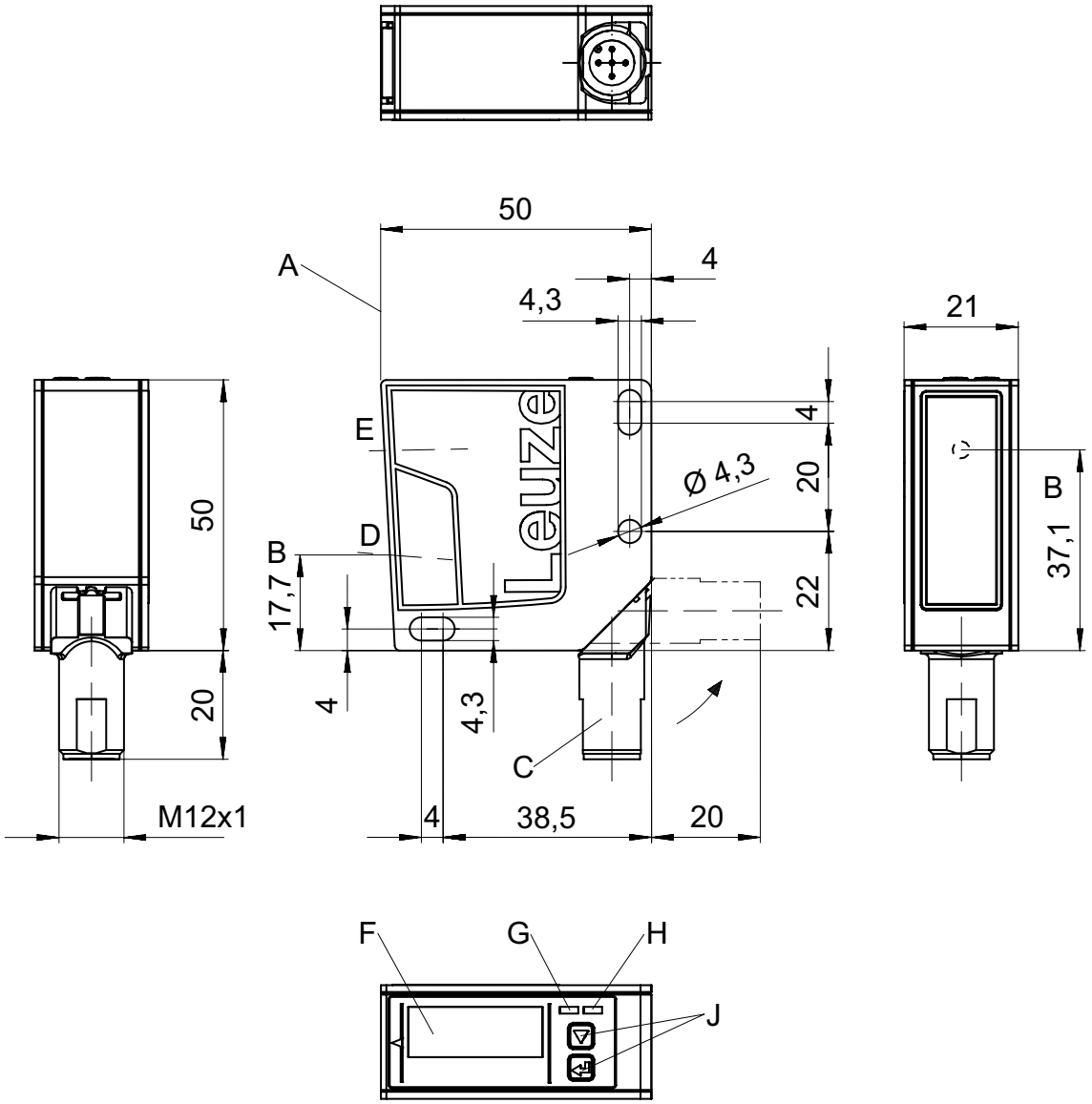

A	Reference edge for the measurement	D	Receiver	G	Yellow LED
B	Optical axis	E	Transmitter	H	Green LED
C	Device plug M12	F	Color display	J	Control buttons

Electrical connection

Connection 1

Function	Signal IN
	Signal OUT
	Voltage supply
Type of connection	Connector
Thread size	M12
Type	Male
Material	Plastic
No. of pins	5 -pin
Encoding	A-coded

Electrical connection

Pin	Pin assignment
1	18 ... 30 V DC +
2	OUT mA / V
3	GND
4	IO-Link / OUT 1
5	multi funct

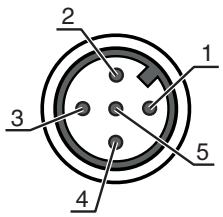

Diagrams

Characteristic curve of analog output

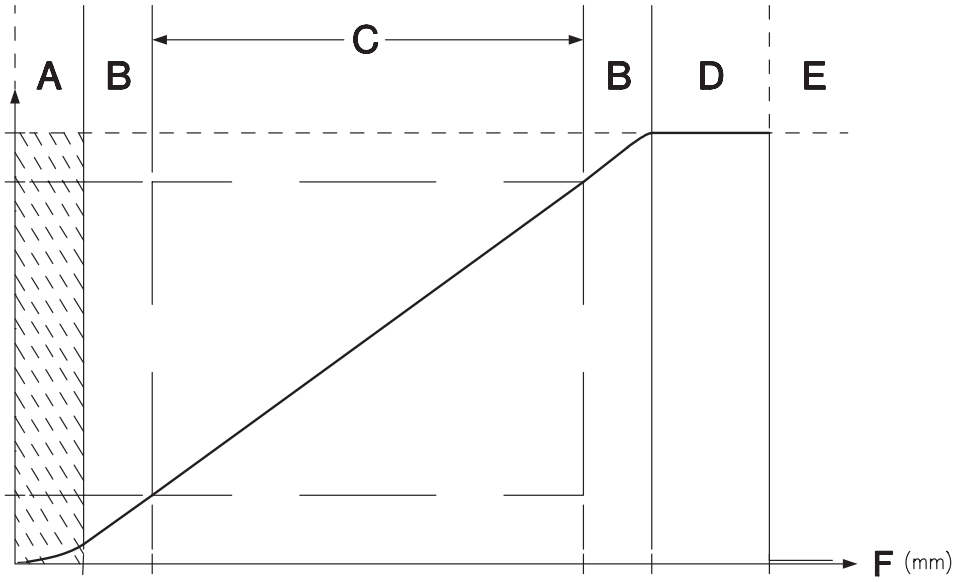

A Area not defined
B Linearity not defined
C Measurement range
D Object detected
E No object detected (characteristic curve behavior adjustable via IO-Link)
F Measurement distance

Diagrams

Accuracy of measurement

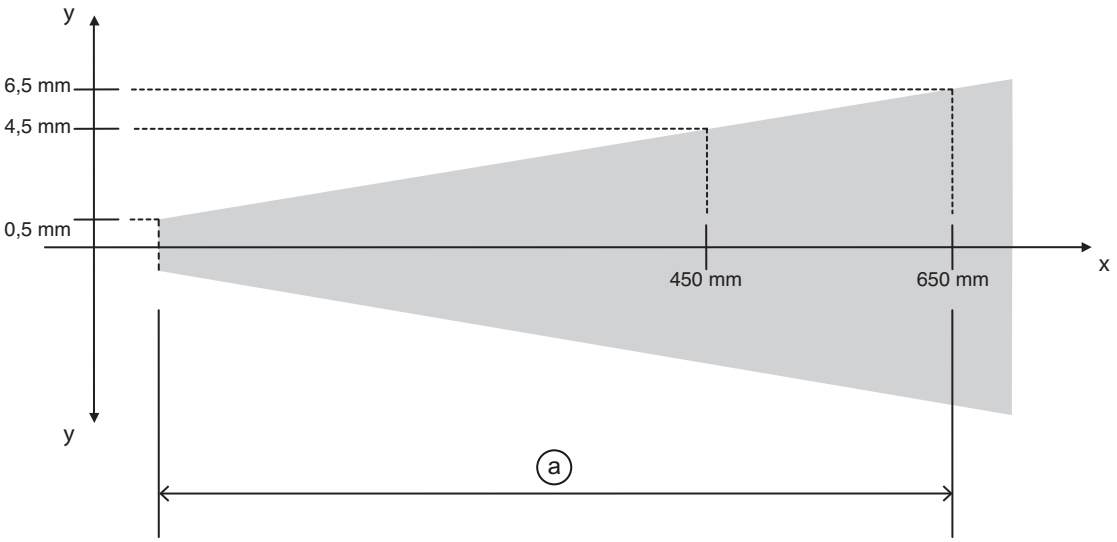

x Measurement distance
y Max. measurement error

a 1% of measurement value

Operation and display

LED	Display	Meaning
1	Green, continuous light	Ready
2	Yellow, continuous light	Object in the measurement range

Part number code

Part designation: **ODS9XX.Y/ZAB-CCC-DDD**

ODS9	**Operating principle** Optical distance sensor of the 9 series
XX	**Light source** L2: laser class 2 L1: laser class 1
Y	**Equipment** 8: OLED display and membrane keyboard for configuration
Z	**Switching output/function OUT 1/IN: Pin 4 or black conductor** L: IO-Link
A	**Switching output / function OUT 2/IN: pin 2 or white conductor** A: Analog output 6: push-pull switching output, PNP light switching, NPN dark switching
B	**Switching output / function OUT 3/IN: Pin 5** X: pin not used 6: push-pull switching output, PNP light switching, NPN dark switching K: Multifunction input (factory setting: deactivation input)

Part number code

CCC	**Operating range** 100: operating range 50 … 100 mm 200: operating range 50 … 200 mm 450: operating range 50 … 450 mm 650: operating range 50 … 650 mm 1050: operating range 50 … 1050 mm
DDD	**Electrical connection** M12: M12 connector

Note

- A list with all available device types can be found on the Leuze website at www.leuze.com.

Notes

Observe intended use!

- This product is not a safety sensor and is not intended as personnel protection.
- The product may only be put into operation by competent persons.
- Only use the product in accordance with its intended use.

ATTENTION! LASER RADIATION – CLASS 2 LASER PRODUCT

Do not stare into beam!
The device satisfies the requirements of IEC 60825-1:2007 (EN 60825-1:2007) safety regulations for a product of **laser class 2** as well as the U.S. 21 CFR 1040.10 regulations with deviations corresponding to Laser Notice No. 50 from June 24, 2007.

- Never look directly into the laser beam or in the direction of reflected laser beams! If you look into the beam path over a longer time period, there is a risk of injury to the retina.
- Do not point the laser beam of the device at persons!
- Interrupt the laser beam using a non-transparent, non-reflective object if the laser beam is accidentally directed towards a person.
- When mounting and aligning the device, avoid reflections of the laser beam off reflective surfaces!
- CAUTION! The use of operating and adjusting devices other than those specified here or the carrying out of differing procedures may lead to dangerous exposure to radiation!
- Observe the applicable statutory and local laser protection regulations.
- The device must not be tampered with and must not be changed in any way.
  There are no user-serviceable parts inside the device.
  Repairs must only be performed by Leuze electronic GmbH + Co. KG.

NOTE

Affix laser information and warning signs!
Laser information and warning signs are affixed to the device. In addition, self-adhesive laser information and warning signs (stick-on labels) are supplied in several languages.

- "Affix the laser information sheet to the device in the language appropriate for the place of use. When using the device in the US, use the stick-on label with the "Complies with 21 CFR 1040.10" note.
- Affix the laser information and warning signs near the device if no signs are attached to the device (e.g. because the device is too small) or if the attached laser information and warning signs are concealed due to the installation position.
- Affix the laser information and warning signs so that they are legible without exposing the reader to the laser radiation of the device or other optical radiation.

Accessories

Connection technology - Connection unit

	Part no.	Designation	Article	Description
	50144900	MD 798i-11-82/L5-2222	IO-Link master	Type: IO-Link master Current consumption, max.: 11,000 mA Switching outputs for each sensor connection: 1 Piece(s) Switching output: Transistor, PNP Interface: IO-Link, Automatic protocol detection, EtherNet IP, Modbus TCP, PROFINET Connections: 12 Piece(s) Sensor connections: 8 Piece(s) Connections for voltage supply: 2 Piece(s) Interface connections: 2 Piece(s) Degree of protection: IP 67, IP 65, IP 69K

Connection technology - Connection cables

	Part no.	Designation	Article	Description
	50133855	KD S-M12-5A-V1-020	Connection cable	Connection 1: Connector, M12, Axial, Female, A-coded, 5 -pin Connector, LED: No Connection 2: Open end Shielded: Yes Cable length: 2.000 mm Sheathing material: PVC
	50133856	KD S-M12-5A-V1-050	Connection cable	Connection 1: Connector, M12, Axial, Female, A-coded, 5 -pin Connector, LED: No Connection 2: Open end Shielded: Yes Cable length: 5.000 mm Sheathing material: PVC
	50132077	KD U-M12-5A-V1-020	Connection cable	Connection 1: Connector, M12, Axial, Female, A-coded, 5 -pin Connector, LED: No Connection 2: Open end Shielded: No Cable length: 2.000 mm Sheathing material: PVC
	50132079	KD U-M12-5A-V1-050	Connection cable	Connection 1: Connector, M12, Axial, Female, A-coded, 5 -pin Connector, LED: No Connection 2: Open end Shielded: No Cable length: 5.000 mm Sheathing material: PVC

Mounting technology - Mounting brackets

	Part no.	Designation	Article	Description
	50118543	BT 300M.5	Mounting bracket	Design of mounting device: Angle, L-shape Fastening, at system: Through-hole mounting Mounting bracket, at device: Screw type, Suited for M4 screws Type of mounting device: Adjustable Material: Stainless steel

Accessories

Mounting technology - Rod mounts

	Part no.	Designation	Article	Description
	50117252	BTU 300M-D12	Mounting system	Design of mounting device: Mounting system Fastening, at system: For 12 mm rod, Sheet-metal mounting Mounting bracket, at device: Screw type, Suited for M4 screws Type of mounting device: Clampable, Adjustable, Turning, 360° Material: Metal
	50128380	BTU 460M-D12	Mounting system	Design of mounting device: Mounting system Fastening, at system: For 12 mm rod Mounting bracket, at device: Screw type Type of mounting device: Adjustable, Turning, 360° Material: Metal

Configuration devices

	Part no.	Designation	Article	Description
	50121098	SET MD12-US2-IL1.1 + Zub.	Diagnostics set	Interface: USB Connections: 2 Piece(s) Degree of protection: IP 20

Note

A list with all available accessories can be found on the Leuze website in the Download tab of the article detailed page.